Version 2019/12/02

TECHNICAL DESCRIPTION

USER'S MANUAL

BEAD Device

FOREWORD

This manual is a guidebook for using the BEAD device correctly. Assembling and adjustment of the device and items to notice when using the device are described in this manual.

Please read this manual thoroughly and use the device after understanding the contents.

This manual may contain discrepancies in detailed information when compared with the actual product due to continued research and improvements. If any question about the product or the contents of this manual arises, please consult your ZSK distributor.

Please keep this manual near the machine for immediate reference.

IMPORTANT SAFETY INSTRUCTIONS

To use the device safely, it is necessary to handle it correctly.

Please read the IMPORTANT SAFETY INSTRUCTIONS described in this manual thoroughly and do not handle this device until you fully understand the contents. Since items to notice when handling this device are described in below signal terms that follow warning marks in this manual, be sure to observe them.

Definitions of signal terms are as follows:

Safety instructions labelled “Danger” must be observed in order to avoid the risk of personal injury.

This symbol marks instructions in the operator‘s guide whose infringement can give rise to personal injury or damage to property.

Risk of injury from electric shock.

Safety instructions labelled “Caution” must be observed in order to avoid the risk of damage to property.

Risk of crushing by moving machine parts.

Risk of piercing by moving mechanical parts (needles, borers).

Risk of burning by hot components (magnets, motors).

Instructions labelled “Note” must be observed to avoid malfunctions/ operating errors.

Content

1. ITEMS TO NOTICE WHEN USING THE DEVICE

The device is intended for use only for its intended purpose and in a technically safe and serviceable condition.

DANGER

Inappropriate use may be danger. Cause physical injury or damage to property.

SAFETY PRECAUTIONS

To work on the embroidery machine equipped with devices only allowed trained personnel.

Daily visually check the integrity of electrical connections and isolation.

Forbidden to operate in rooms with humidity higher than 95%.

Forbidden to operate with wet hands.

Forbidden to operate near flammable items.

CAUTION

Do not strike with heavy objects on the body of the Cutting Element.

Do not install and remove the Magnet Separator with bare hands. It is necessary to use a suitable metal object.

Operator's fingers in the cutting zone during device operation are forbidden.

Avoid contact with the Cutting Element's protection screen.

2.PURPOSE AND DESCRIPTION

Bead device is designed for embroidering glass beads on woven and non-woven materials on ZSK embroidery machines.

The device can be used in the embroidery machines with the control system MSCF (MCP30 / MCP31/MCP35) and JAFA embroidery head type.

GENERAL TECHNICAL SPECIFICATIONS

Maximum speed	**800 st./min**
Embroidery Space Limit:	
• Right	**25 mm**
• Left	**25 mm**
• Front	**120 mm**
• Behind	**10 mm**
Supply voltage	**+24 V (±10%)**
Consumed power	**1,8 A**
Size:	**220x120x390 (mm)**
Weight, net	**3600 g**
BEADS	
Bead Diameter (D)	**2≤D≤3mm**
Bead height (h)	**h≤1,8mm**
Inner diameter of beads (d)	**d≥0,9mm**

3. Characteristics of beads

3.1 Characteristics of beads

- Use only glass beads!
- Sorting by hole diameter (d), outer diameter (D) and height (h).

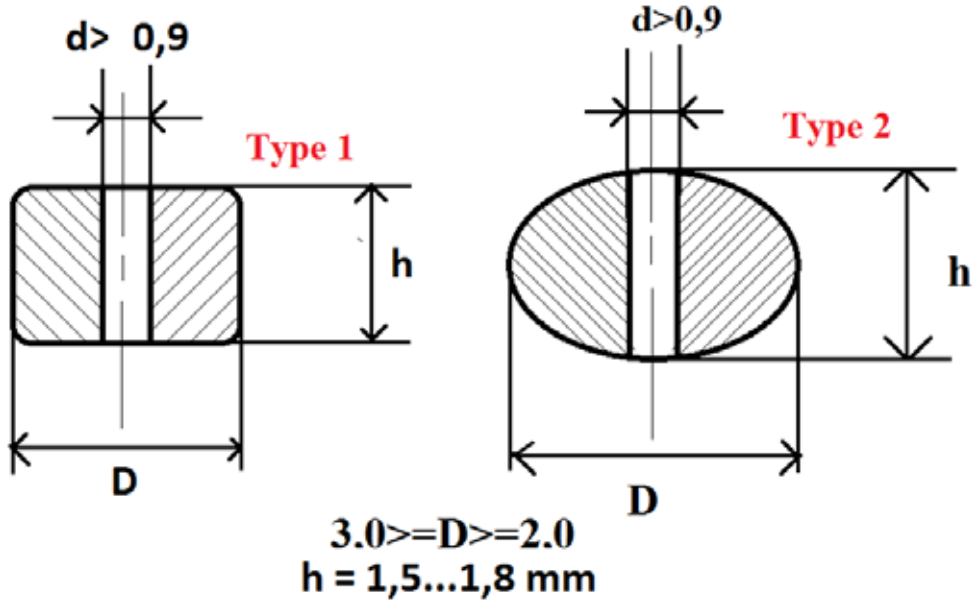

Important!

Before using it is recommended to check the beads for compliance with the specified parameters.

Inner diameter (d) - using needle No. 90.

Bead Diameter (D) - using calipers.

It is not recommended to use beads with a difference in diameter (D) of more than 0.2 mm at the same time.

Recommended thread and needle:

- Threads - monofil No. 100 and more and Polyester No. 60 and more
- Needles - DB x K5 SS Nm 65/9

4. Operation device

4.1. CONTROLS AND INDICATING (MEANS)

4.1.1 BEAD DEVICE

1

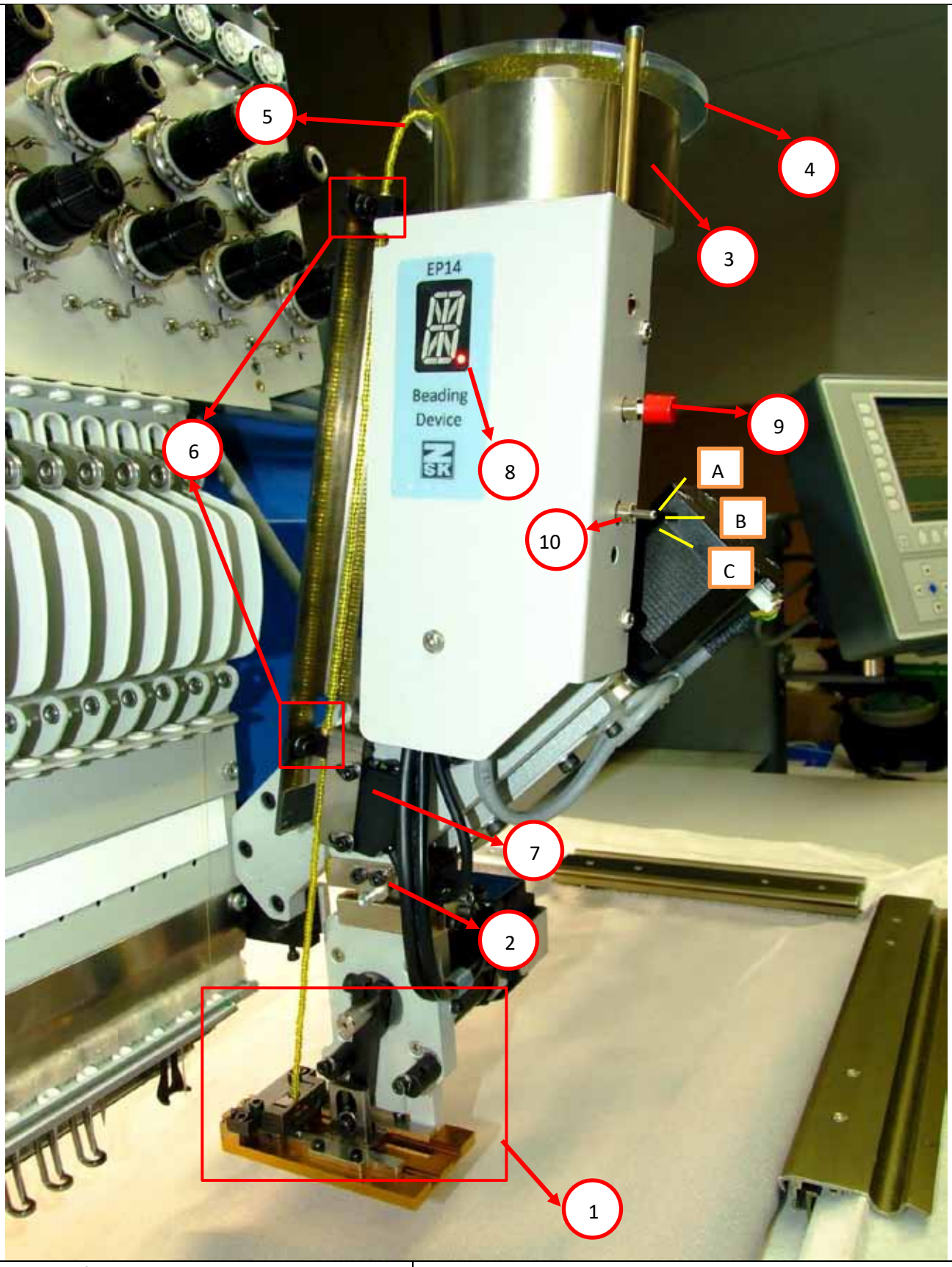

1 - Bead feeder **2** – Caliper for an accurate installation of the bead feeder **3** - Loading drum **4** - Loading drum cover **5** - Bead loading string (string)	**6** – Bead loading guides **7** - Bead Control Sensor **8** - LED indicator **9** - Control button **10** - Toggle switch

Bead feeder		
1	1.1 - lever 1.2 - front eccentric 1.3 - rear eccentric 1.4 – gate 1.6 – bead feeder lever (lever + tweezers)	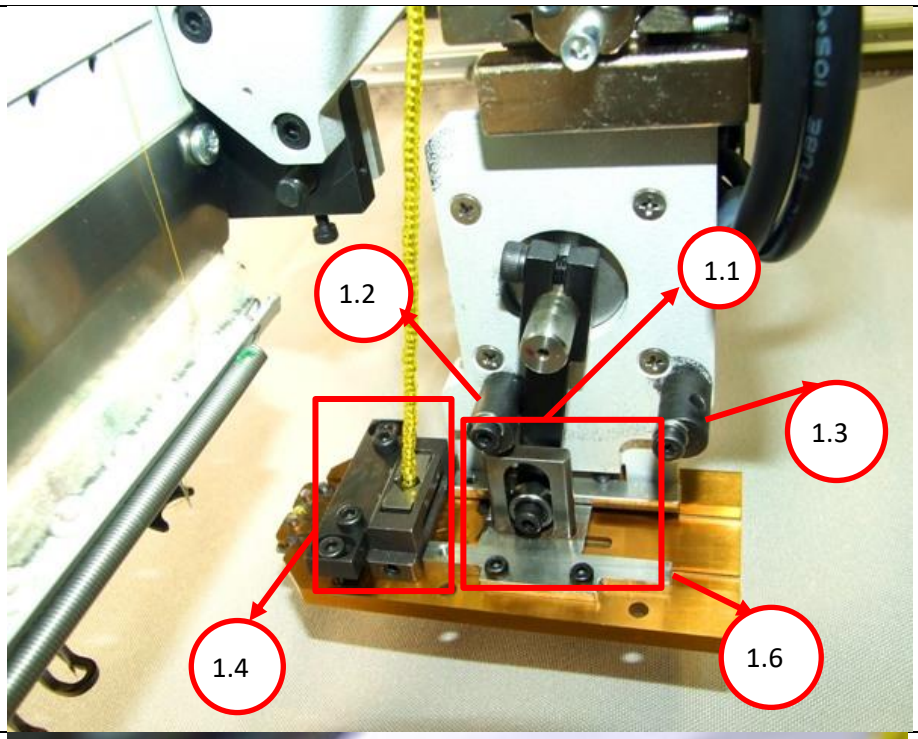
2	1.5 - tweezers	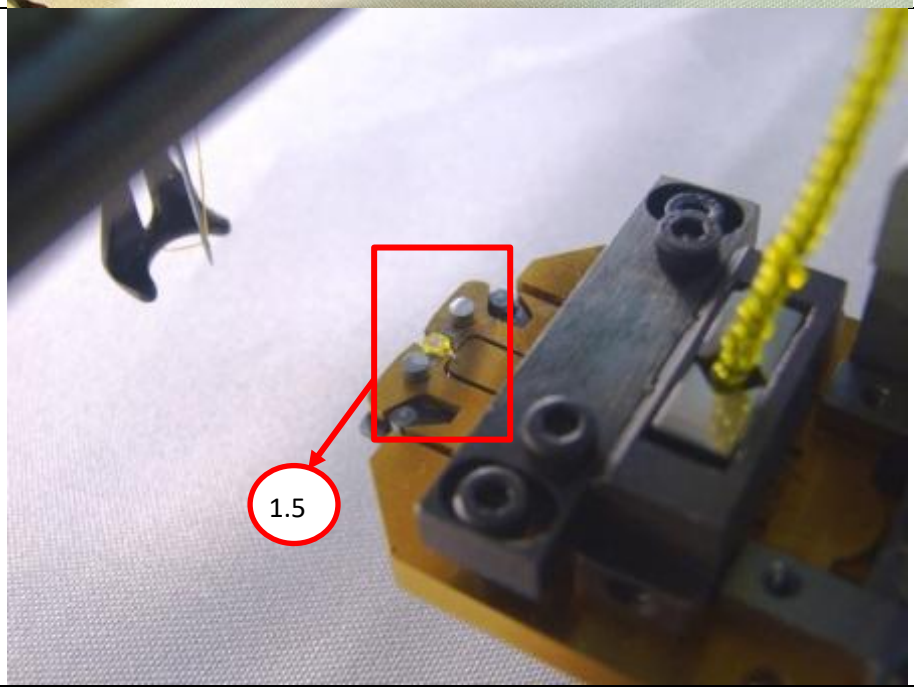

States of Bead Control Sensor		
1	Beads loaded on the string. The indicator is green.	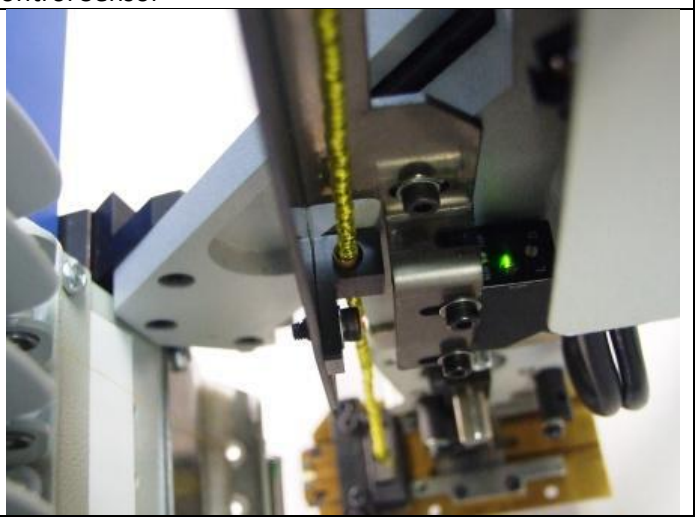

2	The string is empty. If the indicator is green, you need to move the string to get the result, as shown in the photo (green + red).	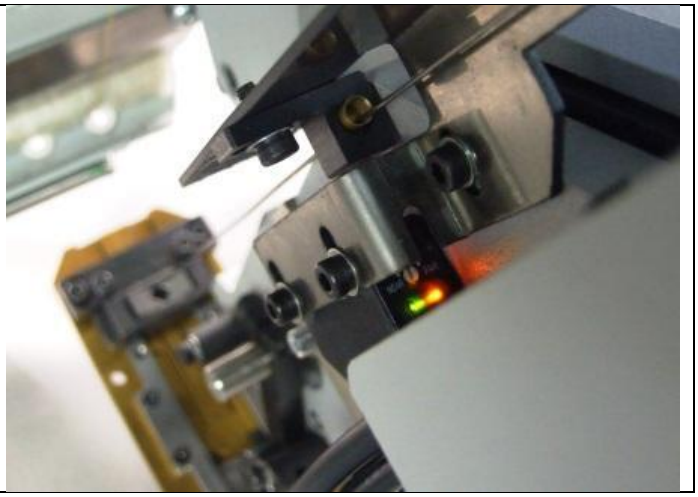

5. MOUNTING BEAD DEVICE ON THE EMBROIDERY HEAD.

ATTENTION! PERFORM WORK ONLY WHEN THE EMBROIDERY MACHINE IS POWERED OFF.

The factory setting is made on beads with a diameter of 2.5-2.6 mm.
Guide sleeves installed for beads 2 -2.8 mm *.
* For beads of 3 mm, it is necessary to install the sleeves, which are included in the delivery set (inner diameter 3.5 mm).

1.1	The embroidery machine must be is turned off.	
1.2	Connect the cable (supplied) to the KSP - 10 board. Secure the cable with a bracket on the front of the embroidery head - photo.	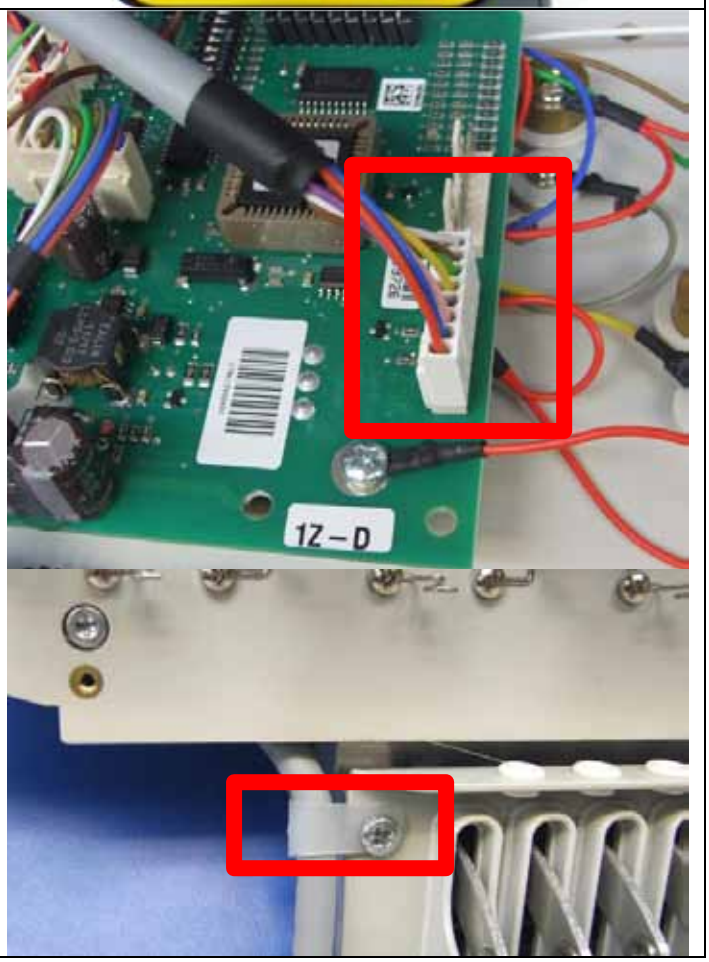

1.3	Preparing the embroidery head for installing the Bead Device is the same as for the Sequins device (foot, mount). Install the device on the pins in the mount.	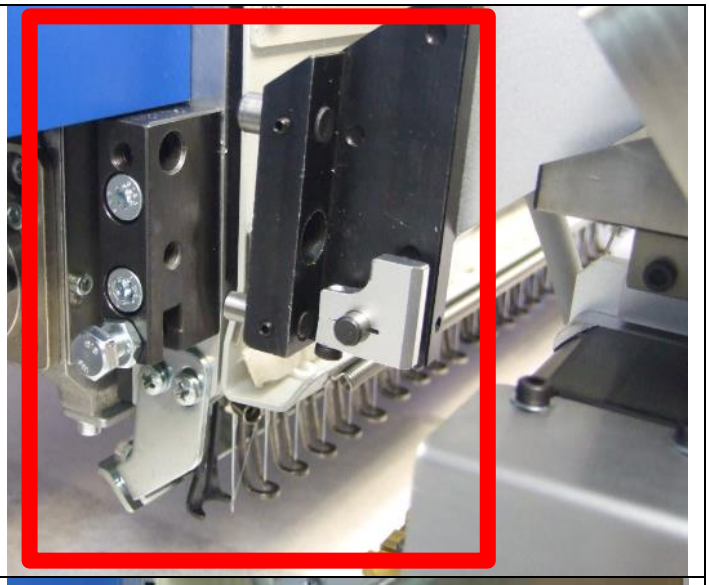
1.4	Fix the screw	
1.5	Connect the cable and tighten the mounting screw	
Turn on the embroidery machine!		
1.6	If all connections are made correctly, the bead feeder lever will be pressed into the rear eccentric, as in Photo 1. And on the device indicator the point will flash (2 times per second).	

1.7	Switch toggle up (A).	
1.8	Installing tweezers with beads under the needle: Perform bead loading as described in the table: Changing the color of the beads	
1.9	To test the operation of the device, you must: On the embroidery machine terminal go to **Service**.	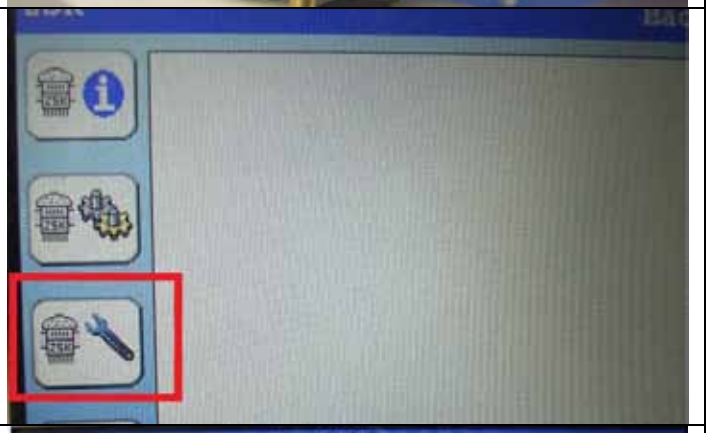
1.10	Select the item **Test machine attachment**	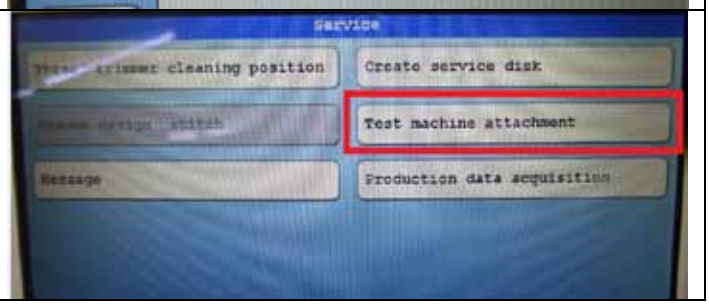

1.11	Select for which device the test mode will be conducted (left/right). After selecting, click **Start testing**.	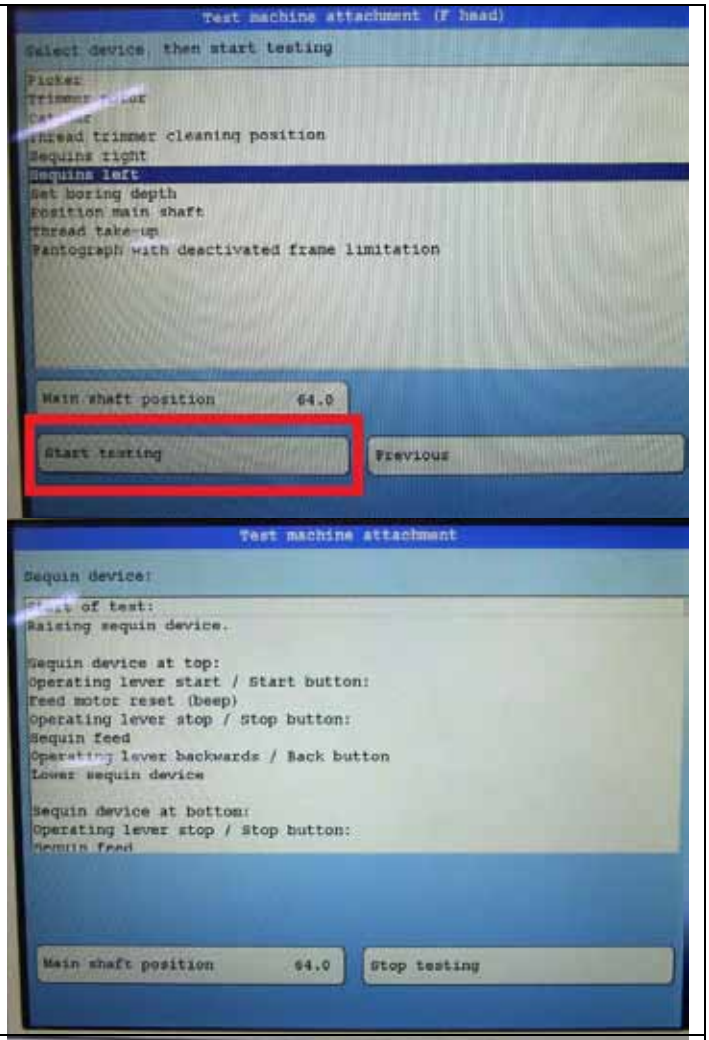
1.12	Device actions: Press button 4 twice - the device will go down.	
1.13	Loosen the fastening screw	

1.14	It is necessary to establish the distance between the needle platform and the base of the bead feeder 4-5 mm. **Note!** You can use the plate of the desired size (as shown in the photo). Fix the fixing screw.	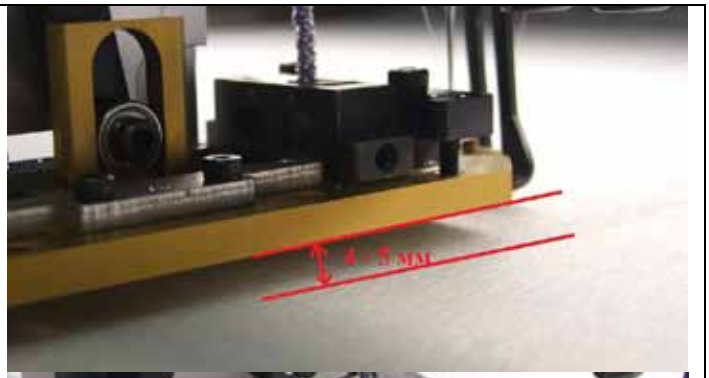 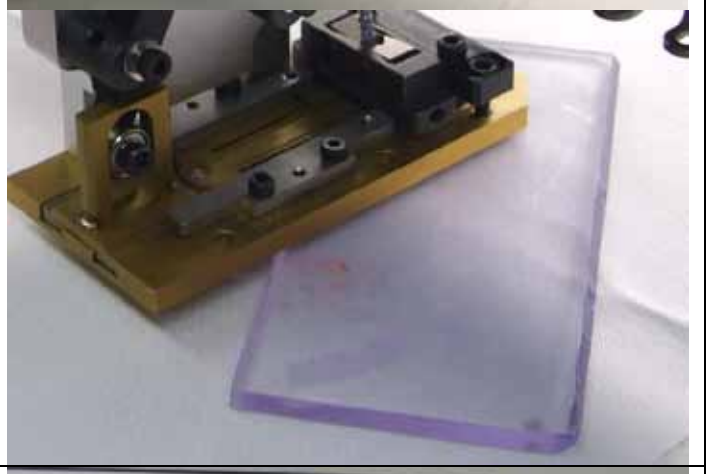
1.15	Press button 4 once - the device will go up. Next, double-click on the button 4 - the device goes down, check the distance.	
1.16	Device downstairs. Press a button 3: **1 press** - tweezers in middle position **2 presses** - tweezers in the front position (beads under the needle) Lower needle bar(200-203^0). **3 presses** - tweezers in the position of loading beads.	

1.17	Check the gap between the presser foot and the tweezers. If distance = 1-2 mm, then go to p.1.19 If not, then to p. 1.18	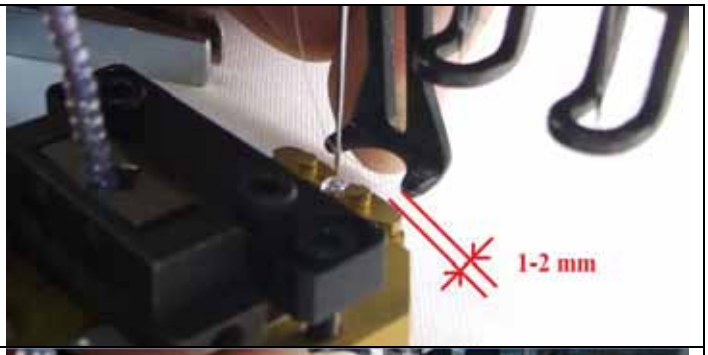
1.18	Bend the foot with pliers.	
1.19	Expose the position of the needle with calipers. Loosen the screws - photo 1.	
1.20	Rotate the screw: - **Clockwise to move the tweezers** - right. - **Counterclockwise** - left. After selecting the position, fix the screws from p. 1.19.	

1.21	**Attention!!!**	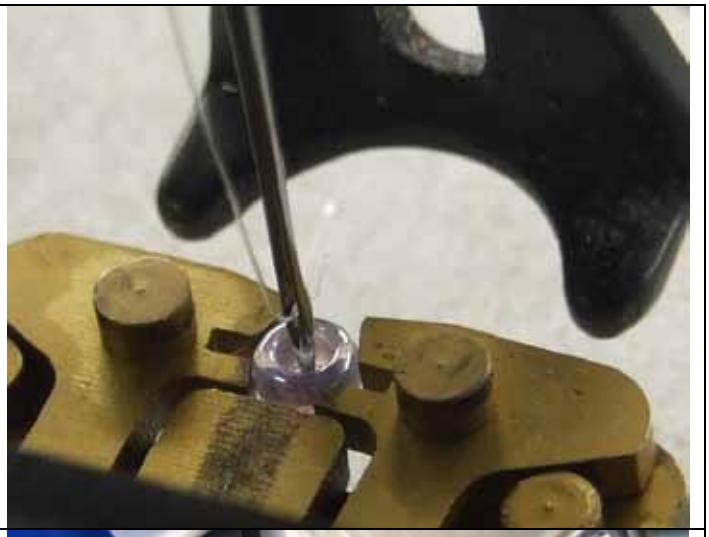
1.22	Similar actions for moving forward / back tweezers. **Clockwise** - Forward **Counterclockwise** - backward Conduct a check of p.1.21(PHOTO)	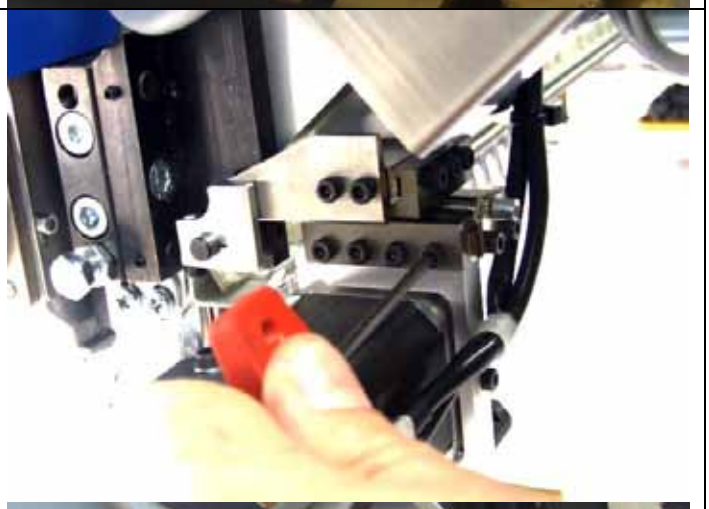 
1.23	Fix the needle bar. We finish testing - **Stop testing**	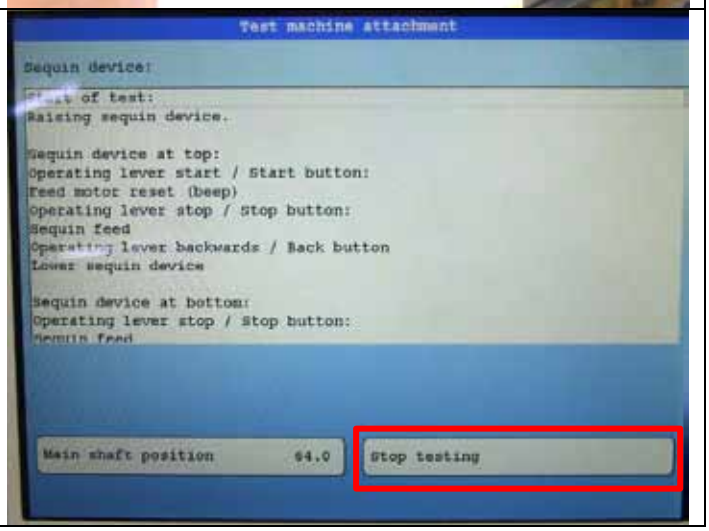

1.24	Check settings Choose a test program(121212.Z00 on ZSK site)	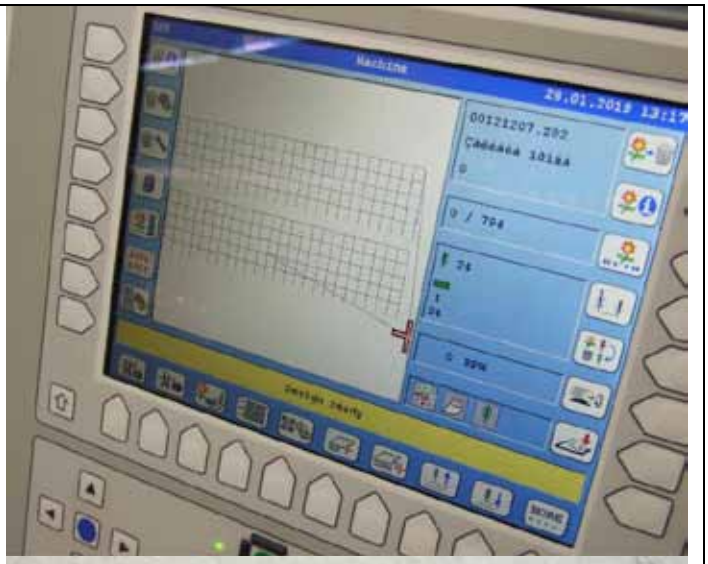 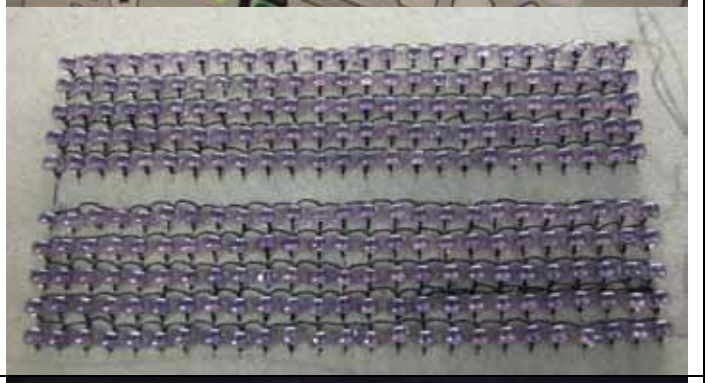
1.25	Speed setting On the embroidery machine terminal go to **Machine Setup**	
1.26	Select item **Speeds setup**	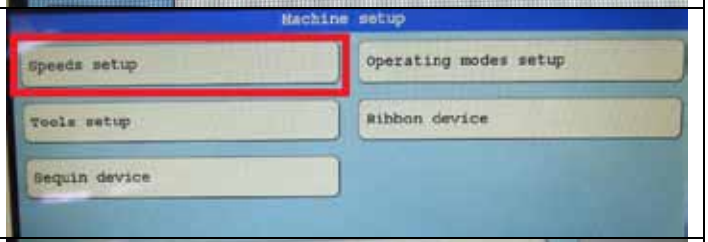
1.27	Speed setting is performed in the Sequins setup field. For the test, choose a speed of 400	

1.28	Attention!!! Need to thread the thread in the hook, as shown in the photo.	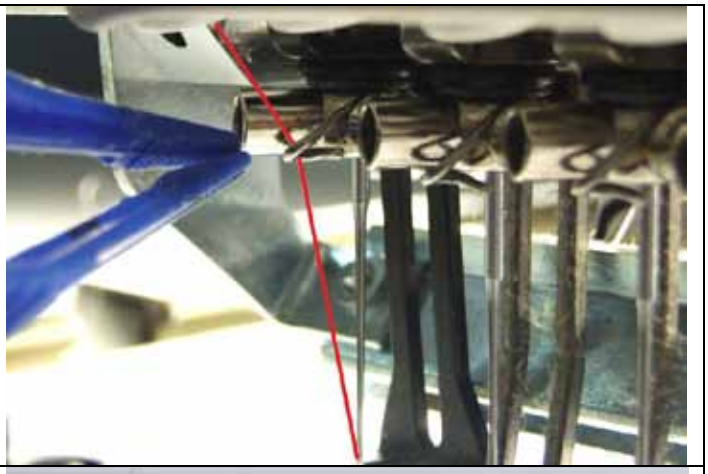
1.29	When embroidering the test sample, we check the positions of the beads in the tweezers (hole up). Correctly: hole up! If the beads in the tweezers are missing or clamped sideways, additional settings must be made. You also need to pay attention to the number of absences of beads while embroidering .	
1.30	If errors do not occur, you can increase the speed. Maximum speed 800	

6. CHANGING THE COLOR OF THE BEADS

Change the color of the beads		
1	Fix the beads on the string with a clip (from the delivery set).	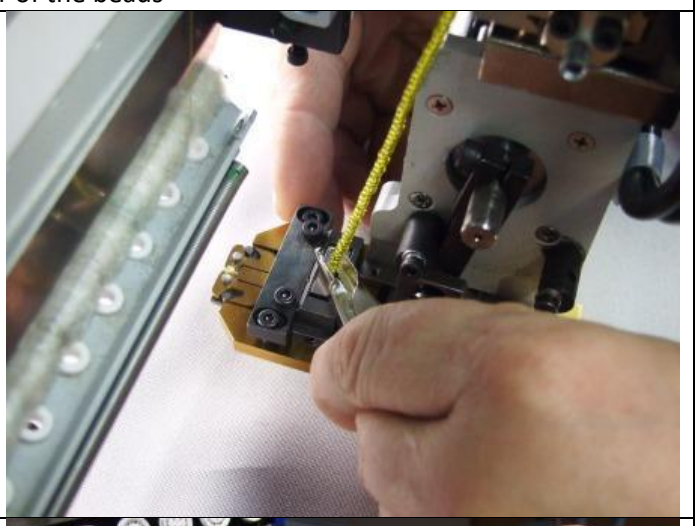
2	Remove the boot drum cover.	
3	Raise the string(cord) and remove the upper beads into the drum.	

4	Pour the beads from the string(cord) into a plastic bag. **Attention!** Do not deform the string.	
5	The string must installed on the side (photo). In order to remove the beads from the gate, it is necessary to hold the lever of the bead feeder (1.6) and press the control button (9). The lever should start to move freely. If failed, try again. Caution! When you press the button, the bead feeder should twitch. **Attention!** Error E6 will displayed on the screen.	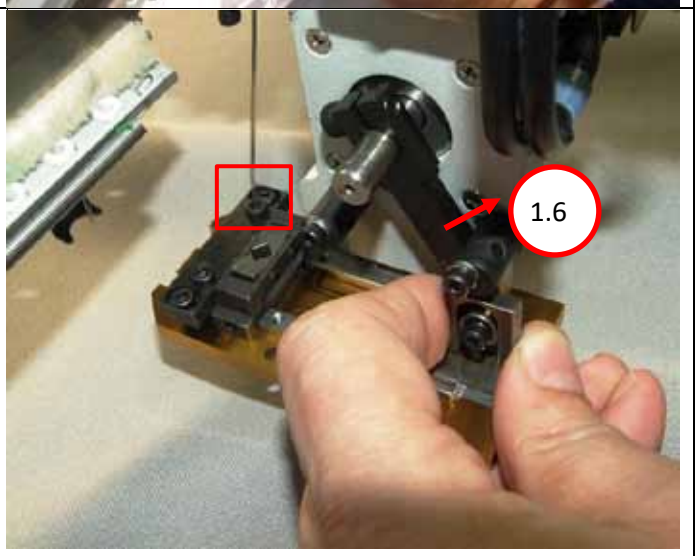

6	Move the bead feeder forward / backward (from front to rear eccentric).	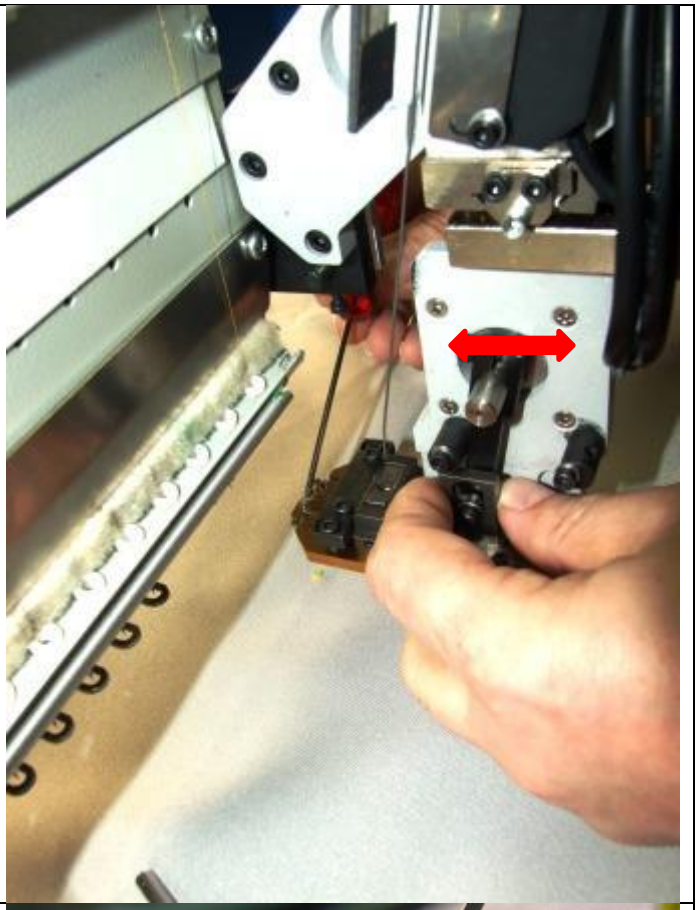
7	Remove the residual beads as shown. Repeat until the bead feeder tweezers are empty. (**approximately 5-7 beads**) Attention! Use fixing wrench to remove a needle.	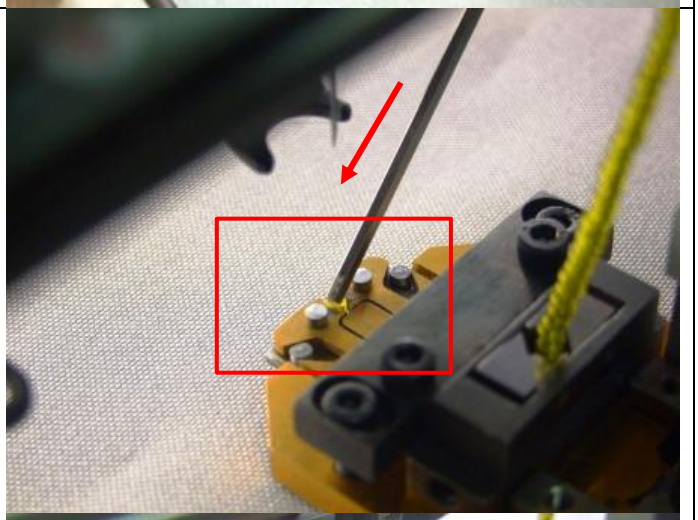 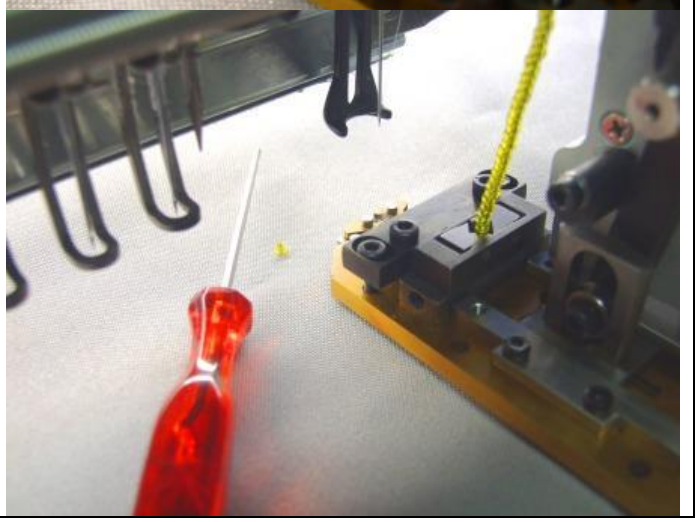

8	Open the drum flap. Pour out the beads.	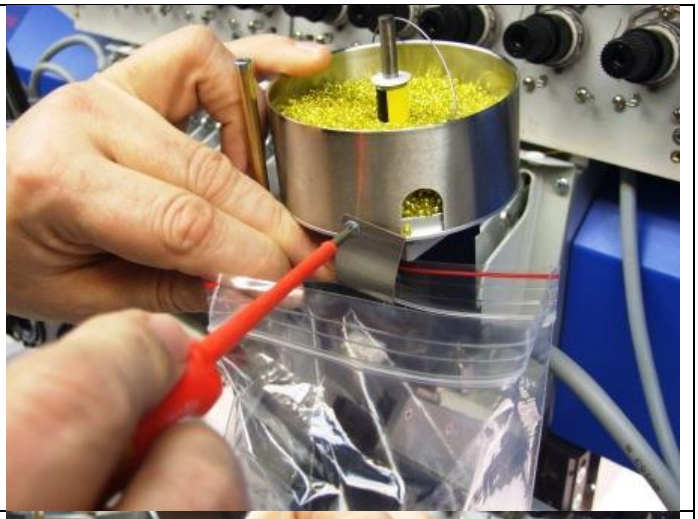
9	Close the drum flap.	
10	Set the string to its original position. Check the status of the touch sensor (**table - States of Bead Control Sensor**).	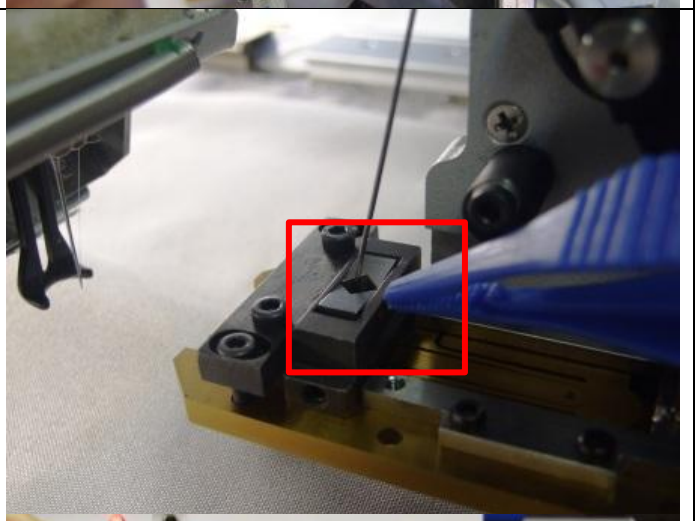 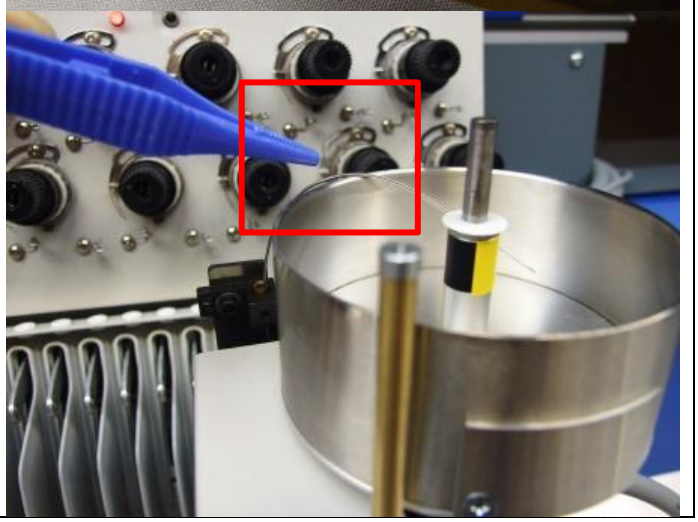

11	Fill the loading drum following these rules (**p.12**).	
12	The level of beads in the loading drum. **MIN** – more than 5 mm. **MAX** - bead level is determined to the yellow-black mark. **MAX** beads volume 70 ml. **Attention!** When the drum is loaded for the first time, it is recommended to use measuring containers <= 70 ml to determine the volume of beads loaded.	

13	To fill the string, switch the toggle switch (10) to the “C” position and briefly press the control button (9) (photo). **Attention!** During string filling, the color of the bead control sensor (green / red) will change. After passing the first guide, the signal color of the sensor should be green. If errors occur, contact your mechanic.	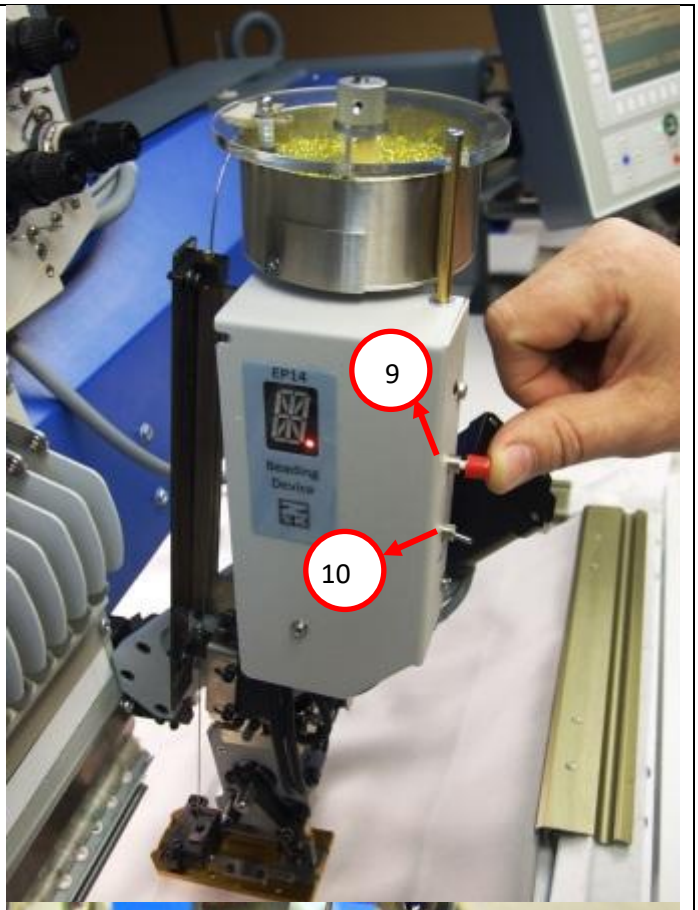 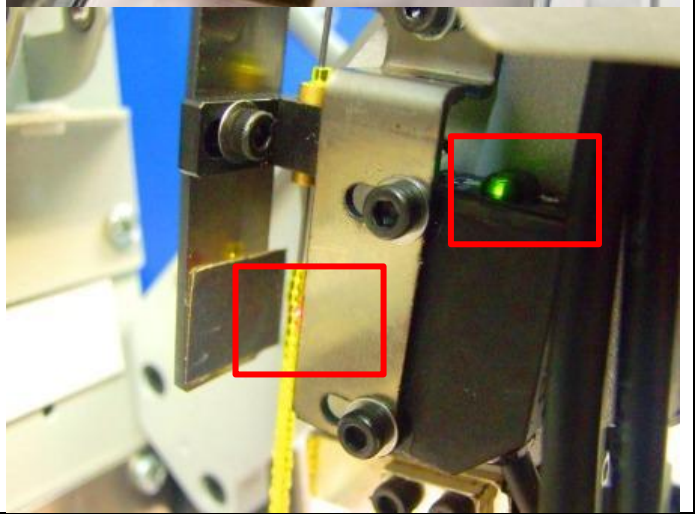

14	After the string is fully loaded, change the position of the toggle switch (10) to “B” - the bead loading drum will stop and go into standby mode. **Attention!** This algorithm for changing the color of beads is accurate when using beads with one range (one size). If the range of beads has not changed, then go to **p. 17.** If it is necessary to make adjustments to the range of beads, perform the following points **(p.15-17).**	
15	Switch the toggle switch (10) to the “A” position, the indicator (8) will display the current value of the size of the beads. With the help of wrenches, it is necessary to loosen the fastening screw of the eccentric (counterclockwise rotation).	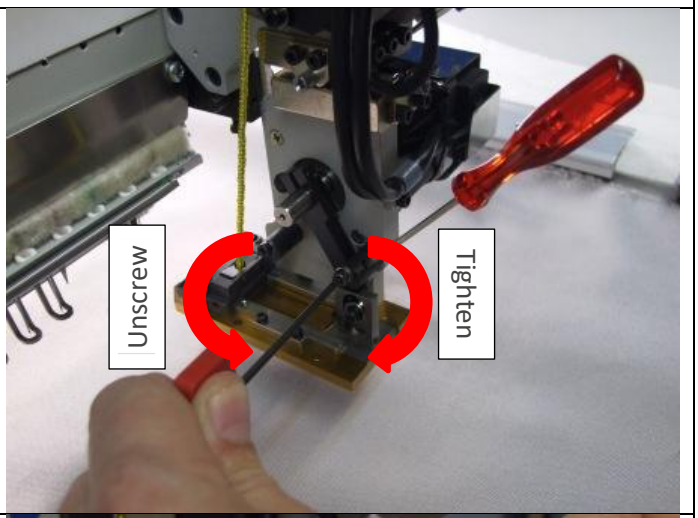
16	Turn the wrench forward / backward to change the range (track on the indicator (8)). Forward - Increase Values Back - Decrease Values Next, you need to tighten the cam screw of the eccentric without removing the key for fixing the needles (p.14).	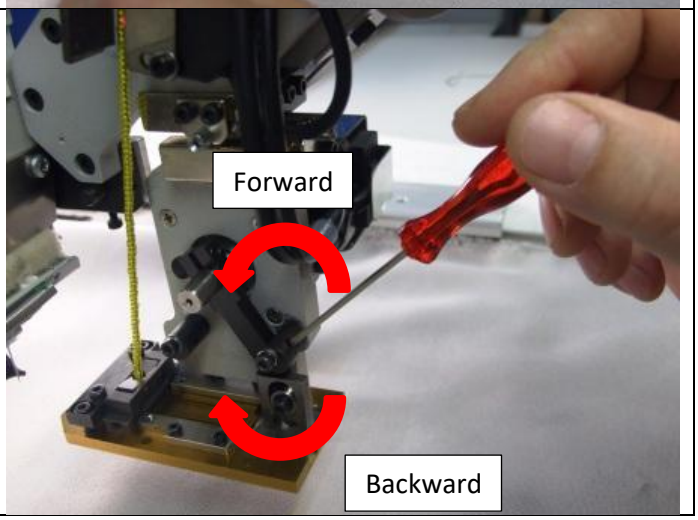

17	After installation, change the position of the toggle switch (10) to "B" and press the button (9). To load beads into tweezers, briefly press the control button (9).	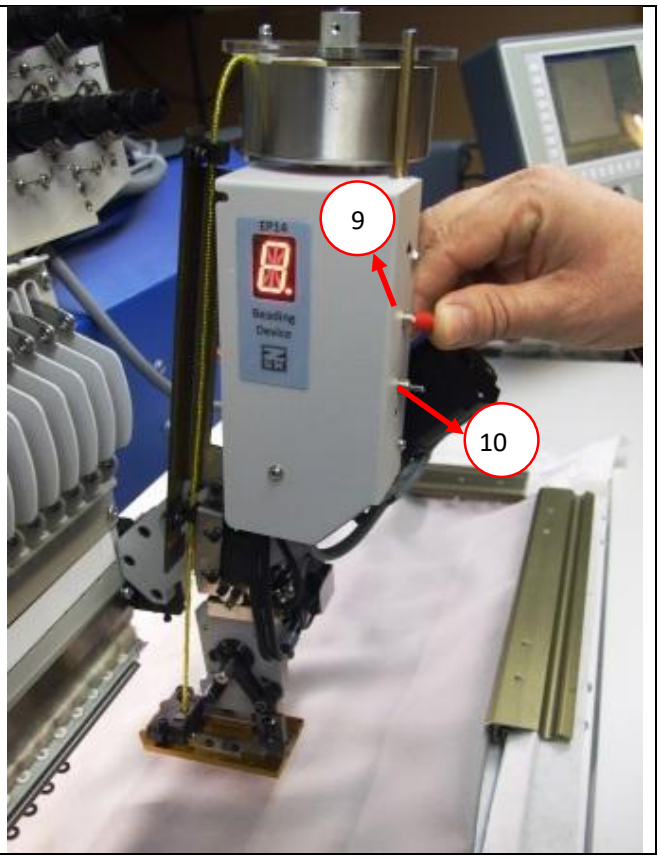

6.1 Setting the value of eccentrics relative to the diameter of the beads

ZSK Bead Device EP-14 left Z-008-4539 (01/2019)

Bead Diameter (D)		Front eccentric	Rear eccentric
1	Bead 2.0 мм – 2.1 мм	6.0-6.1	2.4-2.5
2	Bead 2.5 мм – 2.6 мм	5.8-5.9	2.7-2.8
3	Bead 2.7 мм – 2.8 мм	5.8-5.9	2.8-3.0
4	Bead 2.9 мм – 3.0 мм	5.8-5.9	2.9-3.1

ZSK Bead Device EP-14 right Z-008-4540 (02/2019)

Bead Diameter (D)		Front eccentric	Rear eccentric
1	Bead 2.0 мм – 2.1 мм	6.3-6.4	2.0-2.1
2	Bead 2.5 мм – 2.6 мм	6.2-6.3	2.5-2.6
3	Bead 2.7 мм – 2.8 мм	6.2-6.3	2.7-2.8
4	Bead 2.9 мм – 3.0 мм	6.2-6.3	2.9-3.0

7. Guide for designing Bead Pattern

7.1 Options for placing beads in pattern

Type 1		
Type 2	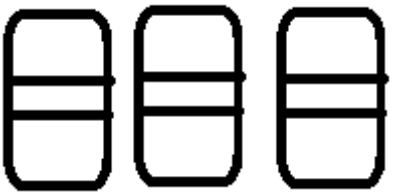	
Type 3		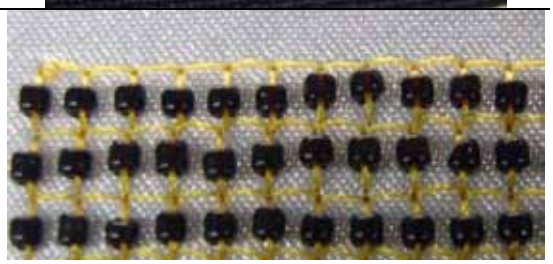

Type 1) When using this method of drawing pattern, it is necessary to take into account the diameter of the beads.

Type 2) When using this method of drawing a pattern, it is necessary to consider the height of the beads.

Type 3) When using this method of drawing pattern, it is necessary to take into account the diameter of the beads.

7.2 Indents in patterns

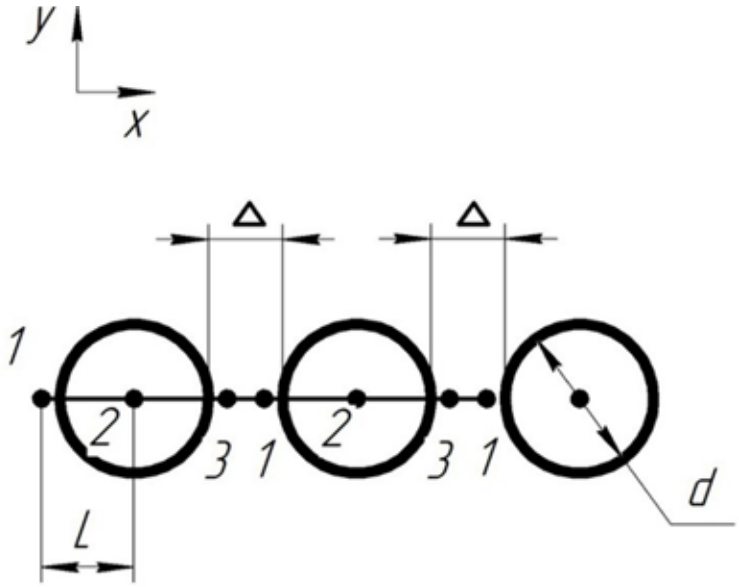

P. 1.1

Typ 1

Dimensions
d - bead diameter, mm
L - stitch length, mm
Δ- indent between the beads, mm
1, 2, 3- needle pricks
Recommendations:
L1-2 = L2-3 = d/2 mm
Δ = L3-1 + 0.2 mm

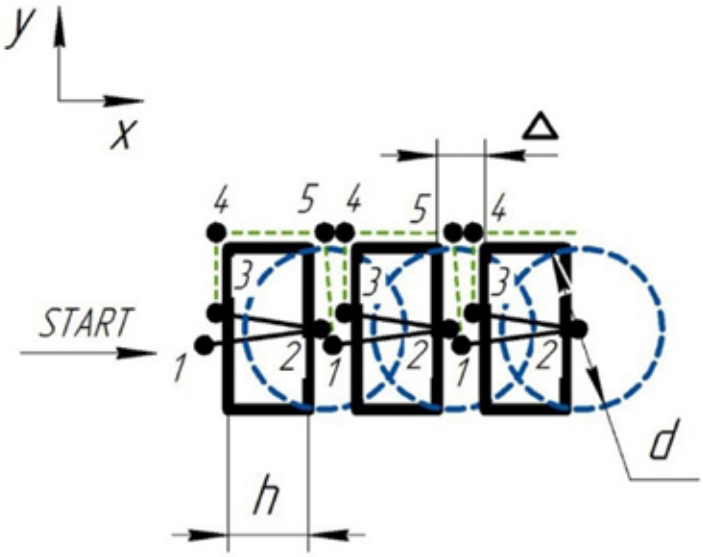

P. 2.1

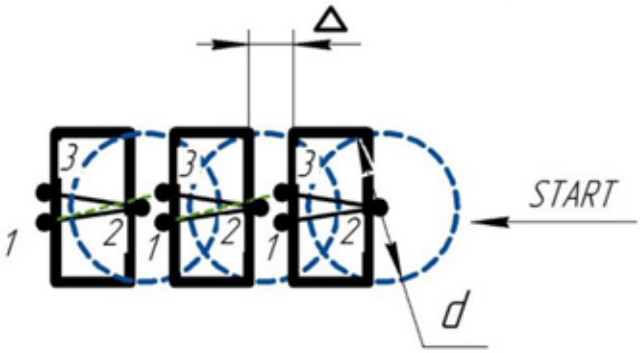

P. 2.2

Typ 2

Dimensions
d- bead diameter, mm
h- bead height, mm
Δ- indent between the beads, mm
1, 2, 3, 4, 5- needle pricks

P. 2.1:
1-2-3- bead stitching
3-4-5-1- transitional stitches
P. 2.2:
1-2-3- bead stitching
3-1- transitional stitches

Recommendations:
L1-2 = L2-3 = L4-5 = h + 0.2 mm
L3-4 = L5-1 = d/2 mm
Δ = D5-4 + 0.2 mm
(D5-4- distance between the 5th prick of the current transitional stitches and the 4th prick of the next ones)

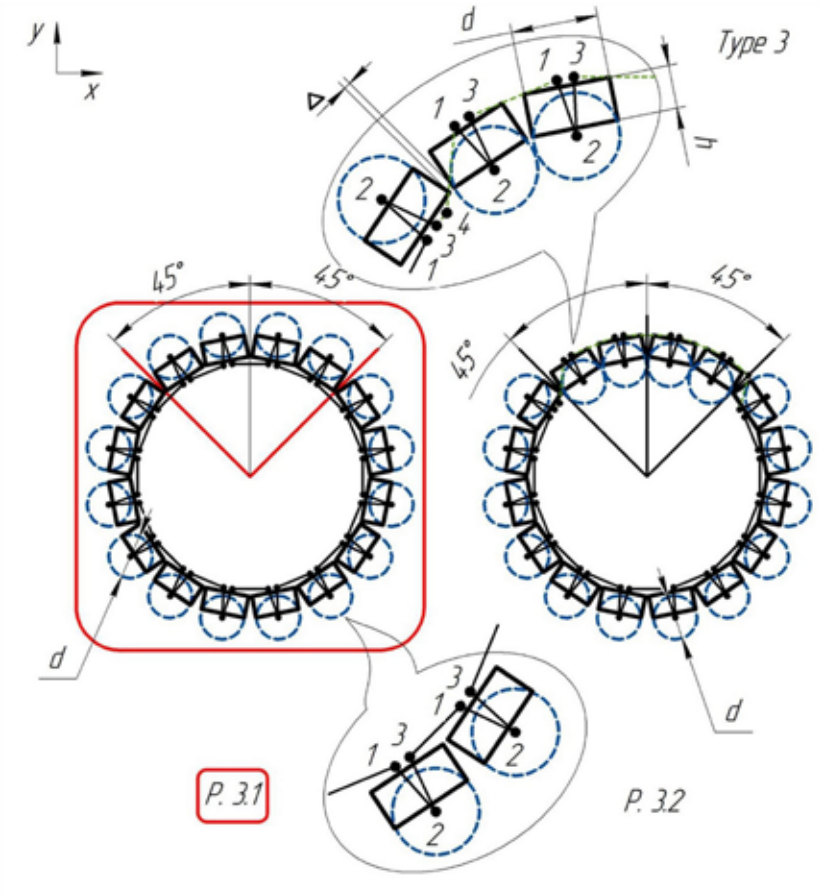

Typ 3

Dimensions

d- bead diameter, mm

h- bead height, mm

1-2-3- bead stitching

3-4-1- bypass stitches

3-1- transitional stitches

Δ- indent between the beads, mm

1, 2, 3, 4- needle pricks

Recommendations:

L1-2 = L2-3 = h + 0.2 mm

L3-1 = d + Δ mm

L3-4 = d/2 + Δ mm

L4-1 = 0.7·d mm

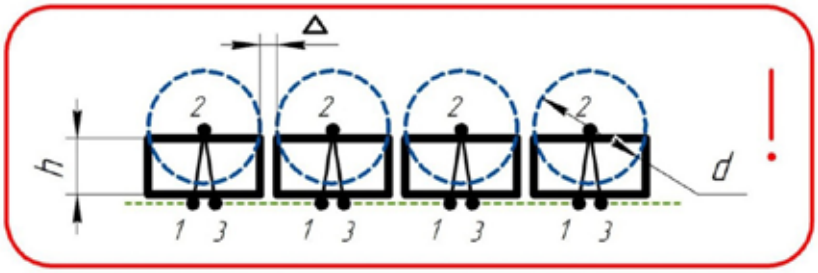

P. 3.3

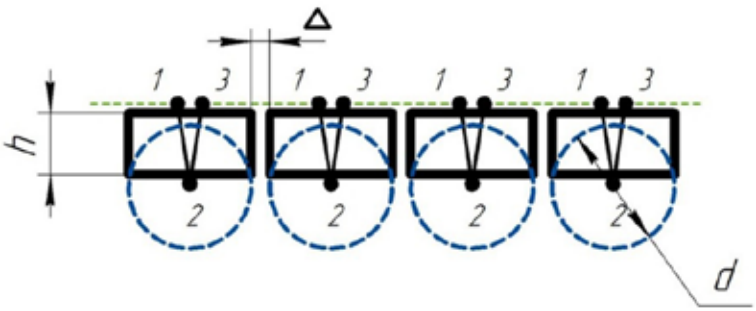

P. 3.4

Due to the peculiarities of the mutual arrangement of the bead feeding unit and the sewing thread, it is recommended that stitch 2-3 be performed mainly in the up direction (from the unit) as shown on P.3.2, P.3.4. Otherwise, the thread may fall between the tweezers sponge and the bead, preventing it from normal feeding or even pulling it out of the tweezers. So the designs on P.3.1, P.3.3 are highly not recommended.

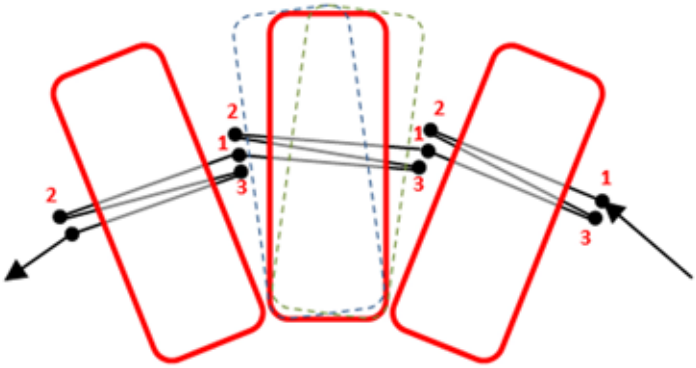

P. 4.1

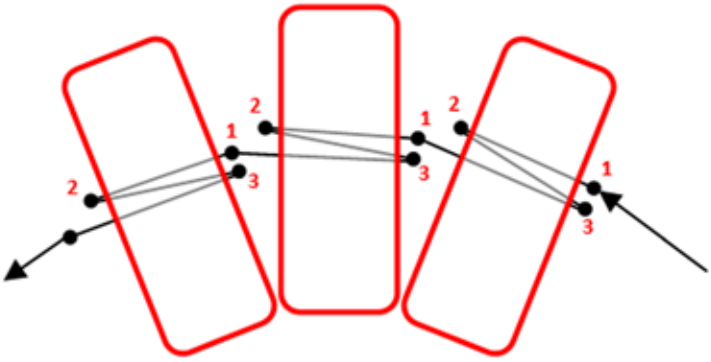

P. 4.2

In addition, punching software lengthens all stitches of the macro when laying beads in an arc, for example, to preserve the condition that beads fit to each other along the inner radius (P.4.1). Because of this lengthening, the beads have the ability to move freely, i.e. may hang out or warp, which degrades the quality of embroidery. It is recommended to lengthen only transitional stitches 3-1 (P.4.2), leaving sewing stitches 1-2 and 2-3 of length L, calculated according to the recommended formulas depending on the type of laying.

Not optimize and not modify a pattern when loading it on an embroidery machine.

To fix the beads securely, **apply 5-stitch start and end bartackings**.

7.3 Examples

8. ERRORS, FAULTS AND SOLUTIONS

8.1 Errors and faults and solutions

(1) Error: E9 - Lack of Beads - DO NOT REMOVE SENSORS SETTINGS

Description: If there is beads, but the E9 has occurred, you need to adjust the position of the string with beads relative to the sensor!

Solution: To correct the position of the string, it is necessary to adjust its position with the help of guides (6)!

In the presence of beads during operation, the sensor light should be green, if it is orange or flashing, repeat steps from p.1.

(2) Error: E6 - positioning tweezers error

Description 1: Beads or a foreign object got in the mechanism of tweezers

Solution: Press the button (9)- the lever pressed against the eccentric. Perform actions from section 6 (p. 5-7 and p. 17). Re-embroider the test sample.

Description 2: Low string lowered

Solution: Adjust string settings by adjusting the height of the loading drum. (See Photo 1- Photo 2)

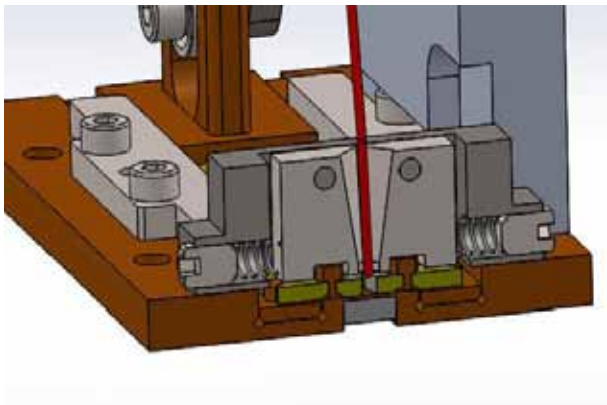

Photo 1- The correct position of the string

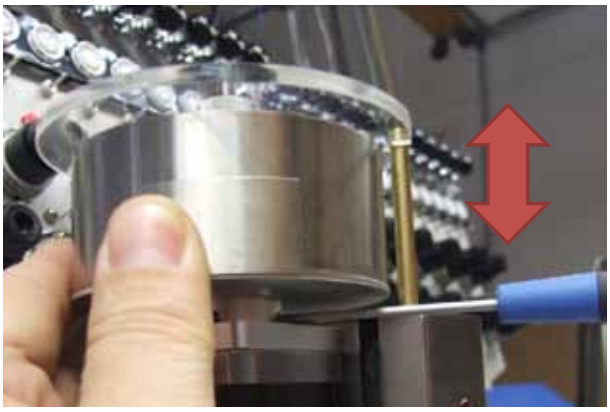

Photo 2

(3) Error: Beads in tweezers turned on edgewise

Description: Beads getting into tweezers has a wrong position

Solution 1: Invalid string position (check item 2 settings)

Solution 2: Change the position of the rear eccentric:

1. increase by 0.1- 0.2 (p. 6.1). Sew a test sample.
2. decrease by 0.1- 0.2 (p. 6.1). Sew a test sample.

(values are displayed on the device indicator)

(4) Error: Bead misses the string in the drum

Description 1: Not enough beads in the drum

Solution: Fill the beads

Description 2: In the drum there are beads with an inner diameter (d) less than the required or dirty hole in the beads.

Solution: We recommend using calibrated beads, keep the beads and drum clean.

Attention! It is recommend to store beads in a closed container.

(5) Error: Does not fix beads - holes in embroidery

Description 1: Missing beads in tweezers

Solution: Find out the cause and solve, following the points above.

Description 2: The position of the tweezers under the needle is not precisely adjusted.

Solution: Check position, see section 5 (p.1.19- p.1.23).

Description 3: Check whether needle bar embroiders all stitches.

Solution: If not, you need to make adjustments
(change the needle, adjust the mechanical grab)

Description 4: If at a speed of 400 st./min the beads sews well,
but at a high speed there are skips..

Solution: Need to adjust the tension of the thread.
Recommendations! Beads should be sewn to the fabric firmly.

Description 5: If beads fly out from under the needle.

Solution: It is necessary to check the pattern set (section 7).

(6) Error: Bad bead loading on the string

Description: String is dirty

Solution:
1. Wipe the strings with alcohol.
2. Clean the guides
3. Check guides for damage
4. Wipe the inner surfaces of the guides.

General recommendations

After changing the settings, each time you need to sew a test sample! Check the correct installation of the needle.

For monofil it is recommended to install the needle with a hole on yourself or turned 5 degrees to the left!

For polyester, needle placement remains standard!

8.2 Adjusting the zero position of the lever (for engineers only)

If you need to disassemble the bead feeder, follow the instructions for setting the zero position.

1	Enter the test mode (section 5 p. 1.9-1.11)	
2	Loosen rear eccentric	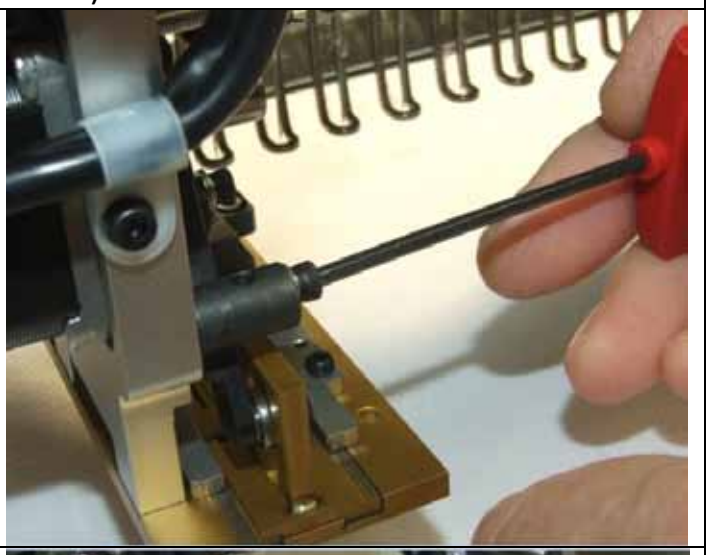
3	Loosen the screw so that the engine can rotate freely.	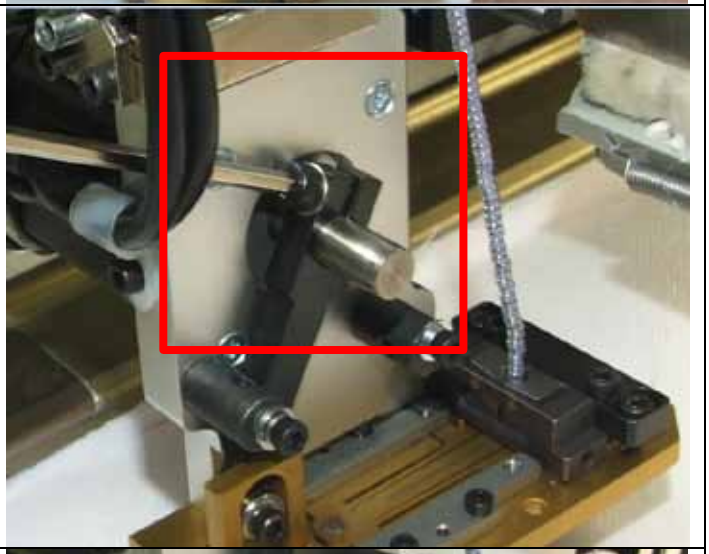
4	Set the position of the bead feed lever (1.6) as in the photo (you can use a magnet)	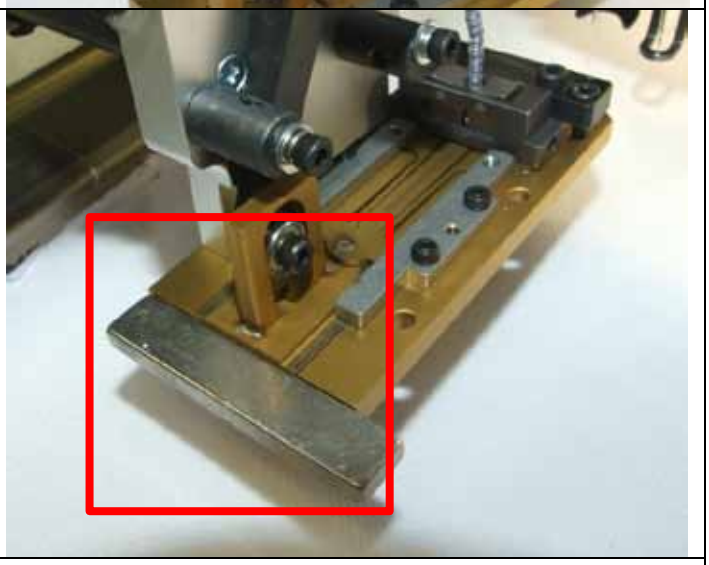
5	Turn the toggle switch (10) to position B and press the button (9) once. The engine rotates and stops herewith.	

6	Press the lever (1.1) and tighten	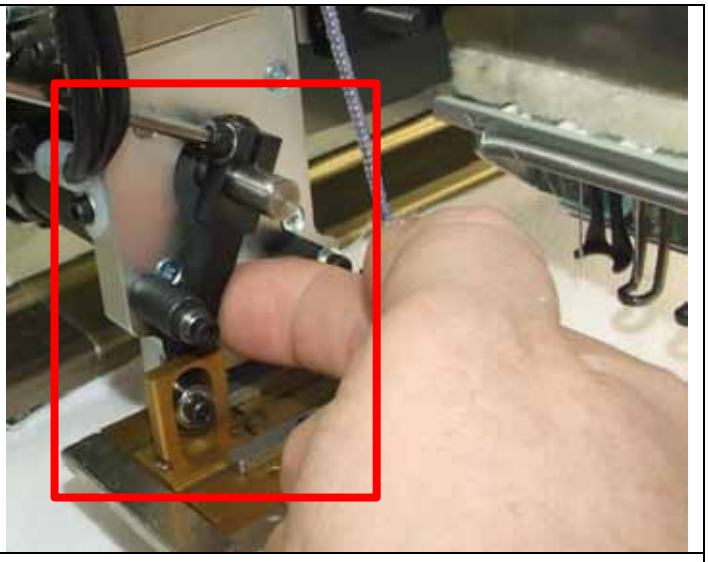
7	Switch the toggle switch (10) to position A. The values on the indicator (8) should be 3.1-3.2	
8	Remove the magnet from p. 4. The values on the indicator (8) may decrease.	
9	Adjusting the middle position of the bead feed lever (standby positions)	
10	1. Double tap on 4 - the device is lowered down. 2. Double tap on 4 - the device has gone up. 3. 1 pressing the button 1 - pressing the lever to the rear eccentric. 4. After 2-3 seconds, press button 1 once - turn off the motor power supply, the bead feed lever (1.6) will move freely.	
11	Switch the toggle switch (10) to position (A) and set the position of the tweezers as shown in the photo.	

12	After setting the position of the tweezers (p.11), it is necessary to press the button (9) and wait on the indicator (8) - *.	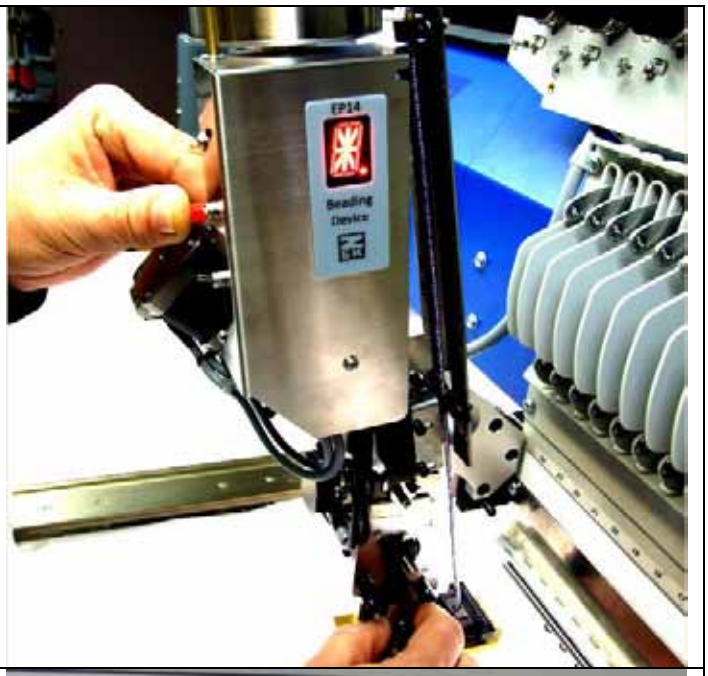
13	After the appearance of *, you need to press button 1 once.	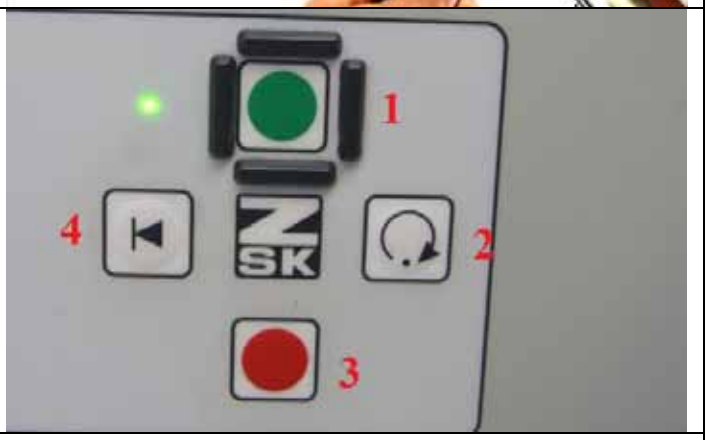
14	Next, you need to make settings for the size of the beads - Section 6 p.15-16 And exit the test mode.	

Beading Device EP14 (Left)

Parts

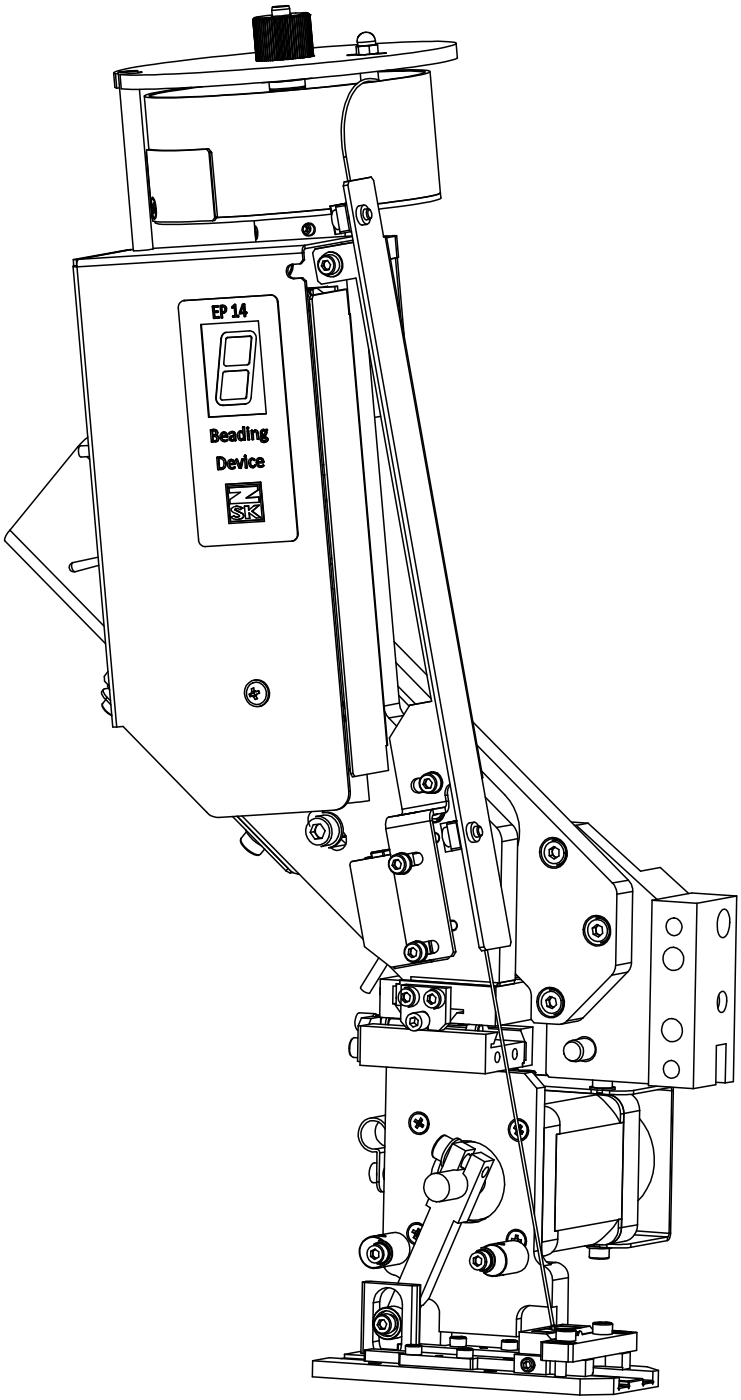

					Beading Device EP14 (Left)	Sheet
						1
Rev.	Sheet	Doc. No.:	Sign.	Date		

Beading Device EP14 (Left)

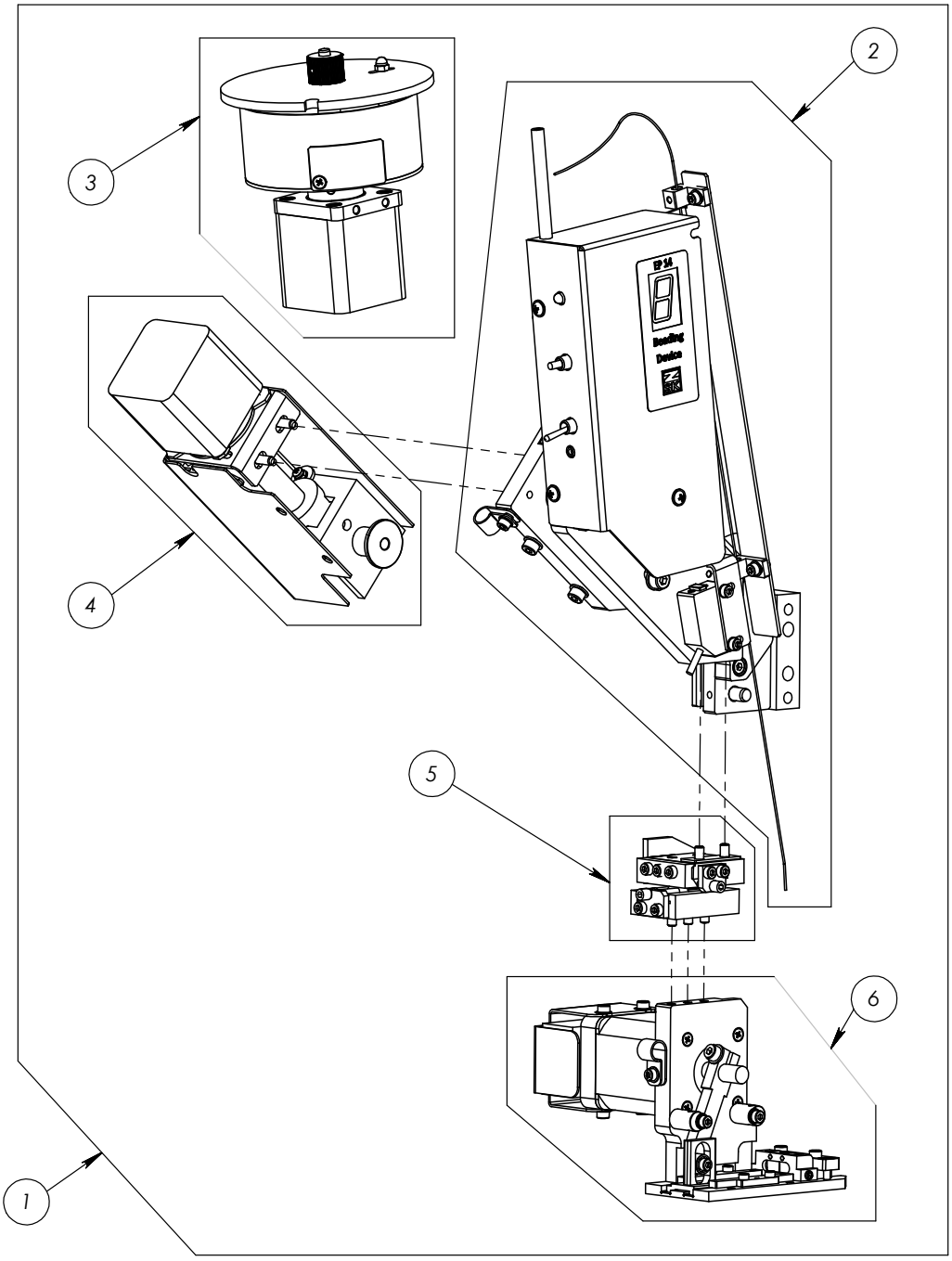

ITEM NO.	DESCRIPTION	PART NUMBER	QTY.
1	Beading Device EP14 (Left)	1400 0000	1
2	Beading Device EP14 (Left) Body (Assembly)	1401 0000	1
3	Beads Loading Unit (Assembly)	1402 0000	1
4	Lifting Unit (Left) (Assembly)	1403 0000	1
5	Beads position Adjustment Unit (Assembly)	1404 0000	1
6	Beads Feeding Unit (Assembly)	1405 0000	1

Rev.	Sheet	Doc. No.:	Sign.	Date	Beading Device EP14 (Left)	Sheet 2

Beading Device Body

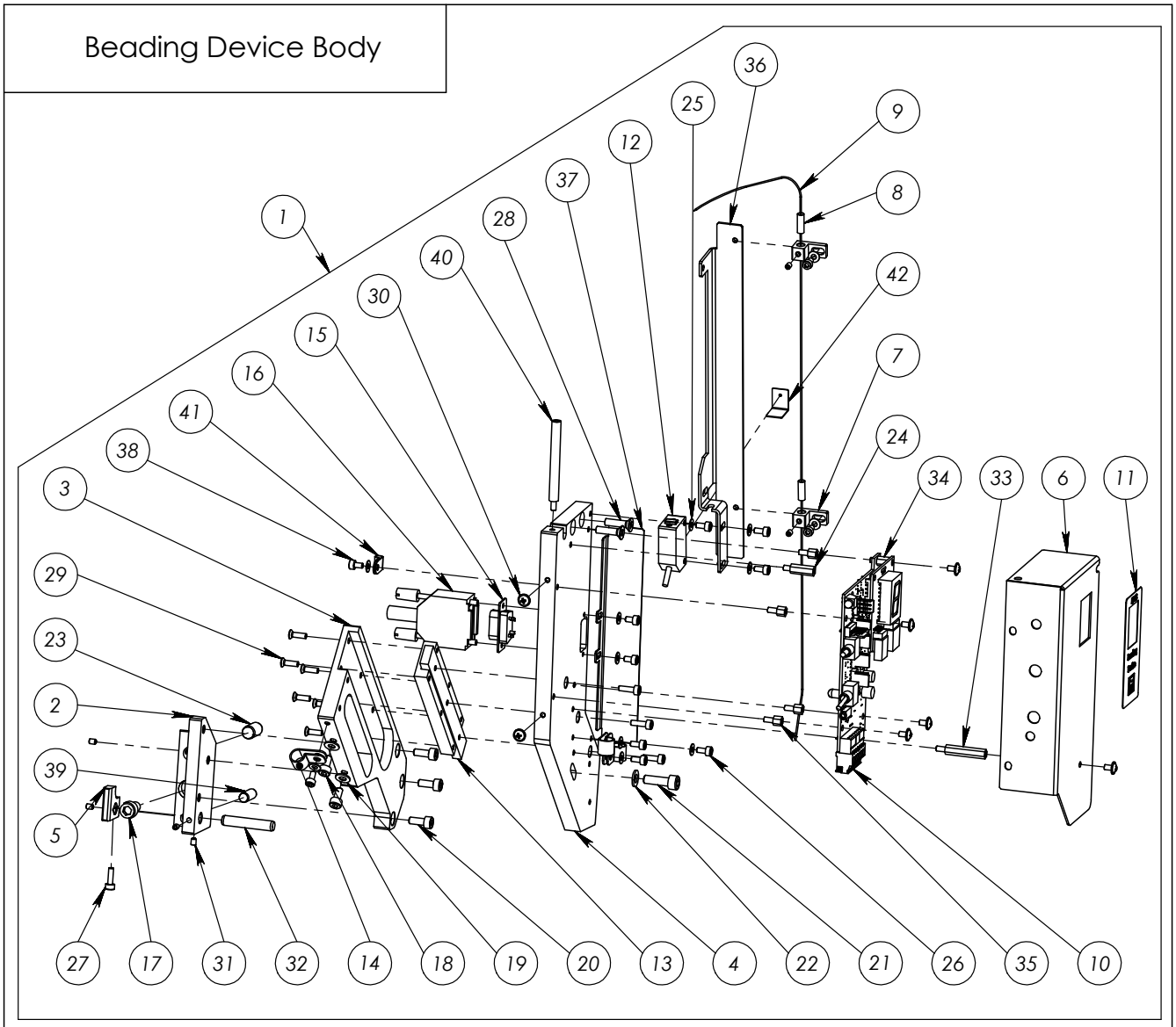

ITEM NO.	DESCRIPTION	PART NUMBER	QTY.
1	Beading Device EP14 (Left) Body (Assembly)	1401 0000	1
2	Mounting Bracket (Left)	1401 1227	1
3	Fixed Bearing Plate (Left)	1401 1228	1
4	Bearing Plate (Left)	1401 1229	1
5	Detent	1401 1230	1
6	Control Panel Cover (Left)	1401 1231	1
7	Beads String Guide	1401 1232	2
8	Guide Bushing 3.5/3.1/2.5	1401 123(3/4/5)	2
9	Beads String (Left)	1401 1236	1
10	Beading Device PCB-A (Left)	1401 3040	1
11	Beading Device Label	1401 1237	1
12	Optical Sensor PANASONIC CX-441	000 2214	1
13	Linear Bearing L=90mm	000 2215	1
14	R-type Cable Clip d=8mm (Nylon)	000 2216	3
15	Connector D-Sub 9 pin Mail	000 2217	1
16	D-Sub 9 pin Connector Body	000 2218	1
17	Hexagon Socket Head Cap Screw M6x12 DIN 912	000 2013	1

Rev.	Sheet	Doc. No.:	Sign.	Date	Beading Device Body	Sheet 3

Beading Device Body

ITEM NO.	DESCRIPTION	PART NUMBER	QTY.
18	Hexagon Socket Head Cap Screw M4x8 DIN 912	000 2012	2
19	Plain Washer Small 4.3 DIN 433	000 2007	2
20	Hexagon Socket Head Cap Screw M4x10 DIN 912	000 2006	3
21	Hexagon Socket Head Cap Screw M5x16 DIN 912	000 2129	1
22	Plain Washer Small 5.3 DIN 433	000 2026	1
23	Parallel Pin D8x18	000 2248	1
24	Standoff 5xM3x15 Male-Female	000 2220	1
25	Plain Washer Small 3.2 DIN 433	000 2009	12
26	Hexagon Socket Head Cap Screw M3x8 DIN 912	000 2008	11
27	Hexagon Socket Head Cap Screw M3x10 DIN 912	000 2020	4
28	Countersunk Flat Head Cross Recess Screw M4x16 ISO 7046-1	000 2085	2
29	Countersunk Flat Head Cross Recess Screw M3x10 ISO 7046-1	000 2022	6
30	Pan Head Cross Recess Collar Screw M3x5 DIN 967	000 2011	9
31	Hexagon Socket Set Screw Flat Point M3x5 DIN 913	000 2081	4
32	Parallel Pin D6x35	000 2249	1
33	Standoff 5xM3x25 Male-Female	000 2221	1
34	Standoff 5xM3x8 Male-Female	000 2088	1
35	Standoff 5xM3x5 Male-Female	000 2004	4
36	Beads String Guide Corner (Left)	1401 1281	1
37	PCB's Protective Corner	1401 1282	1
38	Hexagon Socket Head Cap Screw M3x5 DIN 912	000 2017	3
39	Parallel Pin D6x18	000 2250	1
40	Standoff 5xM3x50 Male-Female	000 2251	1
41	R-type Cable Clip d=4mm (Nylon)	000 2001	1
42	Sensor Curtain	1401 1286	1

Beads Loading Unit

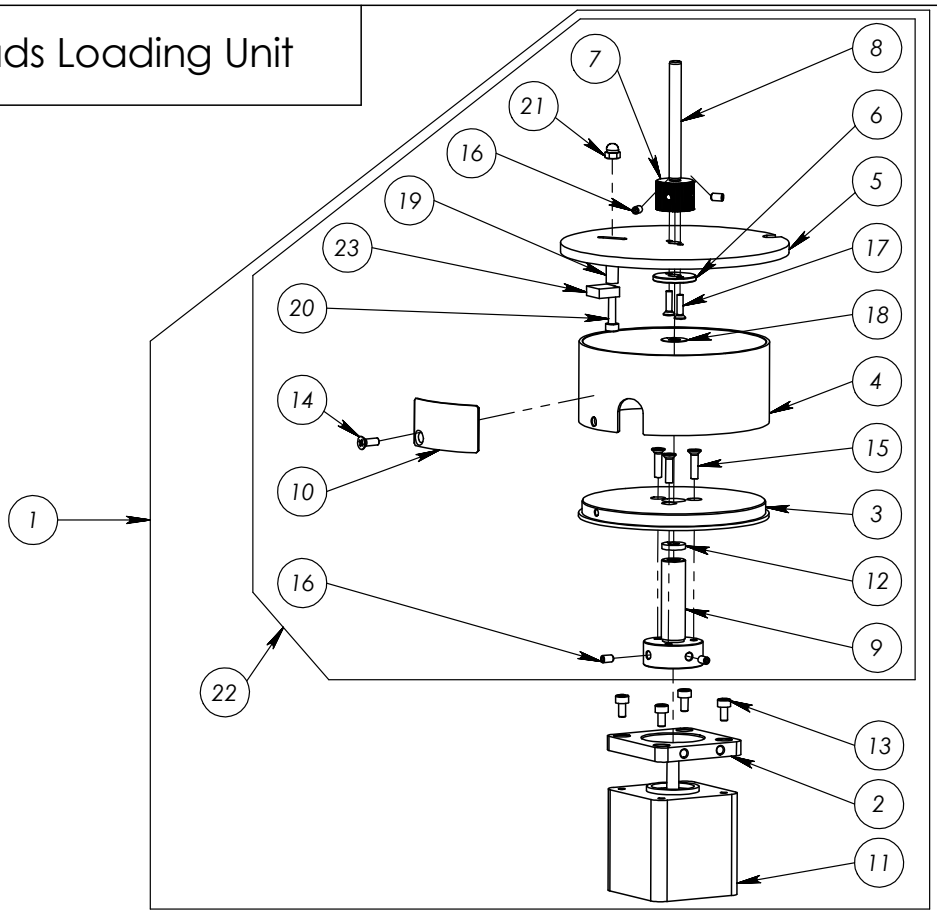

ITEM NO.	DESCRIPTION	PART NUMBER	QTY.
1	Beads Loading Unit (Assembly)	1402 0000	1
2	Beads Loading Unit Motor Plate	1402 1238	1
3	Beads Cup Bottom	1402 1239	1
4	Beads Cup Body	1402 1240	1
5	Beads Cup Lid	1402 1241	1
6	Beads Cup Washer	1402 1242	1
7	Beads Cup Lid Bushing	1402 1243	1
8	Beads Cup Axle	1402 1244	1
9	Beads Cup Prop	1402 1245	1
10	Beads Unloading Curtain	1402 1246	1
11	Step Motor 17HD362N-3	1402 4008	1
12	Washer D12xd5.5x2 (Stainless Steel)	1402 1282	1
13	Hexagon Socket Head Cap Screw M3x6 DIN 912	000 2018	4
14	Countersunk Flat Head Cross Recess Screw M3x8 ISO 7046-1	000 2154	1
15	Countersunk Flat Head Cross Recess Screw M3x10 ISO 7046-1	000 2022	3
16	Hexagon Socket Set Screw Flat Point M3x5 DIN 913	000 2081	4
17	Countersunk Flat Head Cross Recess Screw M2.5x10 ISO 7046-1	000 2255	2
18	Washer 0.3mm (Teflon)	1402 1284	1
19	Bushing L=9mm (Teflon)	1402 1285	1
20	Hexagon Socket Head Cap Screw M3x16 DIN 912	000 2061	1
21	Acorn Nut M3 DIN 1587	000 2148	1
22	Beads Loading Cup (Assembly)	1402 1289	1
23	Tape "Walzenplusch" 12x12mm	572 015 ZSK	1

Rev.	Sheet	Doc. No.:	Sign.	Date	Beads Loading Unit	Sheet 5

Lifting Unit

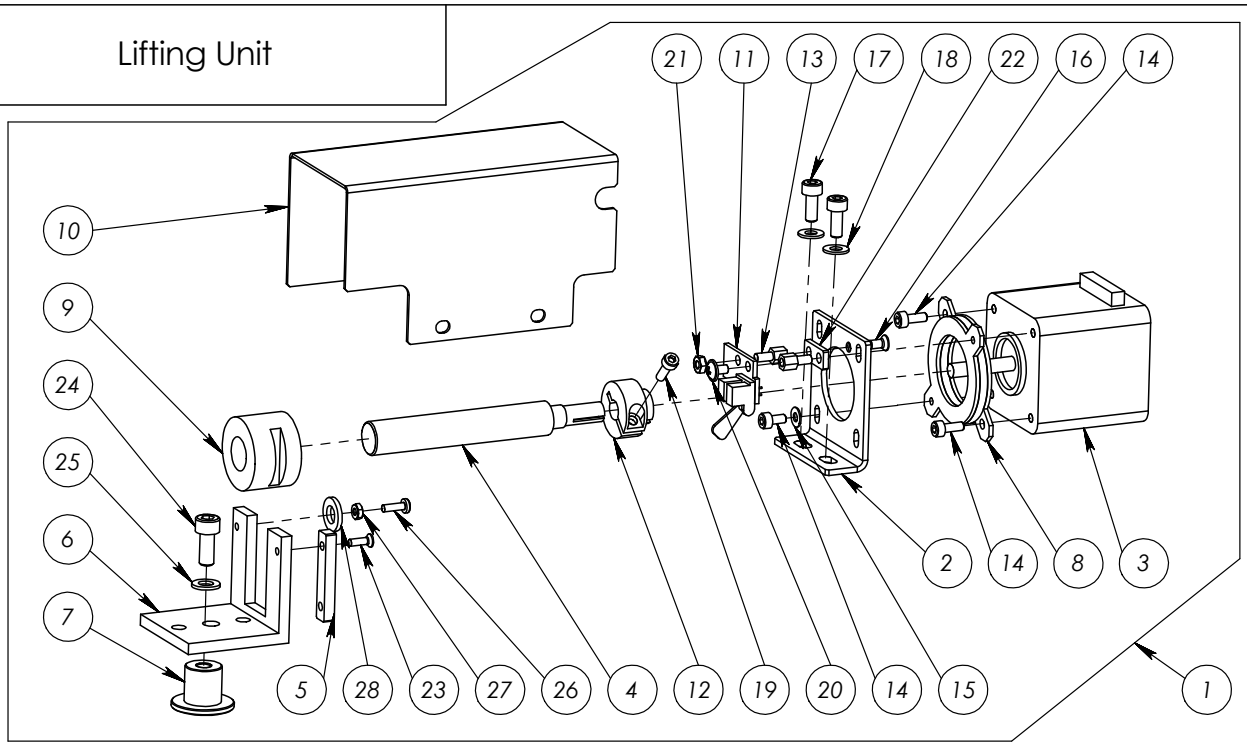

ITEM NO.	DESCRIPTION	PART NUMBER	QTY.
1	Lifting Unit (Left) (Assembly)	1403 0000	1
2	Lifting Motor Corner	1403 1247	1
3	Step Motor 17HD362N-3	1403 4008	1
4	Lifting Screw	1403 1248	1
5	Optical Sensor Detent	1403 1249	1
6	Lifting Corner	1403 2223	1
7	Axle	1403 1250	1
8	Lift Engine Damper	1403 2224	1
9	Lifting Nut	1403 2225	1
10	Lifting Motor Cover	1403 1251	1
11	Optical Sensor PCB-A	1403 3003	1
12	Lifting Clutch	1403 2226	1
13	Standoff 5xM3x5 Male-Female	000 2004	2
14	Hexagon Socket Head Cap Screw M3x6 DIN 912	000 2018	3
15	Plain Washer Small 3.2 DIN 433	000 2009	1
16	Countersunk Flat Head Cross Recess Screw M3x6 ISO 7046-1	000 2165	1
17	Hexagon Socket Head Cap Screw M4x8 DIN 912	000 2012	2
18	Plain Washer Small 4.3 DIN 433	000 2007	2
19	Hexagon Socket Head Cap Screw M3x10 DIN 912	000 2020	1
20	Pan Head Cross Recess Collar Screw M3x5 DIN 967	000 2011	1
21	Hexagon Nut M3 ISO 4032	000 2024	1
22	Rectangular Washer	1403 1266	1
23	Countersunk Flat Head Cross Recess Screw M2.5x8 ISO 7046-1	000 2246	1
24	Hexagon Socket Head Cap Screw M5x12 DIN 912	000 2025	1
25	Plain Washer Small 5.3 DIN 433	000 2026	1
26	Pan Head Screws with Cross Recess M2.5x30 DIN EN ISO 7045	000 2252	1
27	Hexagon Nut M2.5 ISO 4032	000 2253	1

Rev.	Sheet	Doc. No.:	Sign.	Date	Lifting Unit	Sheet 6

Beads position Adjustment Unit

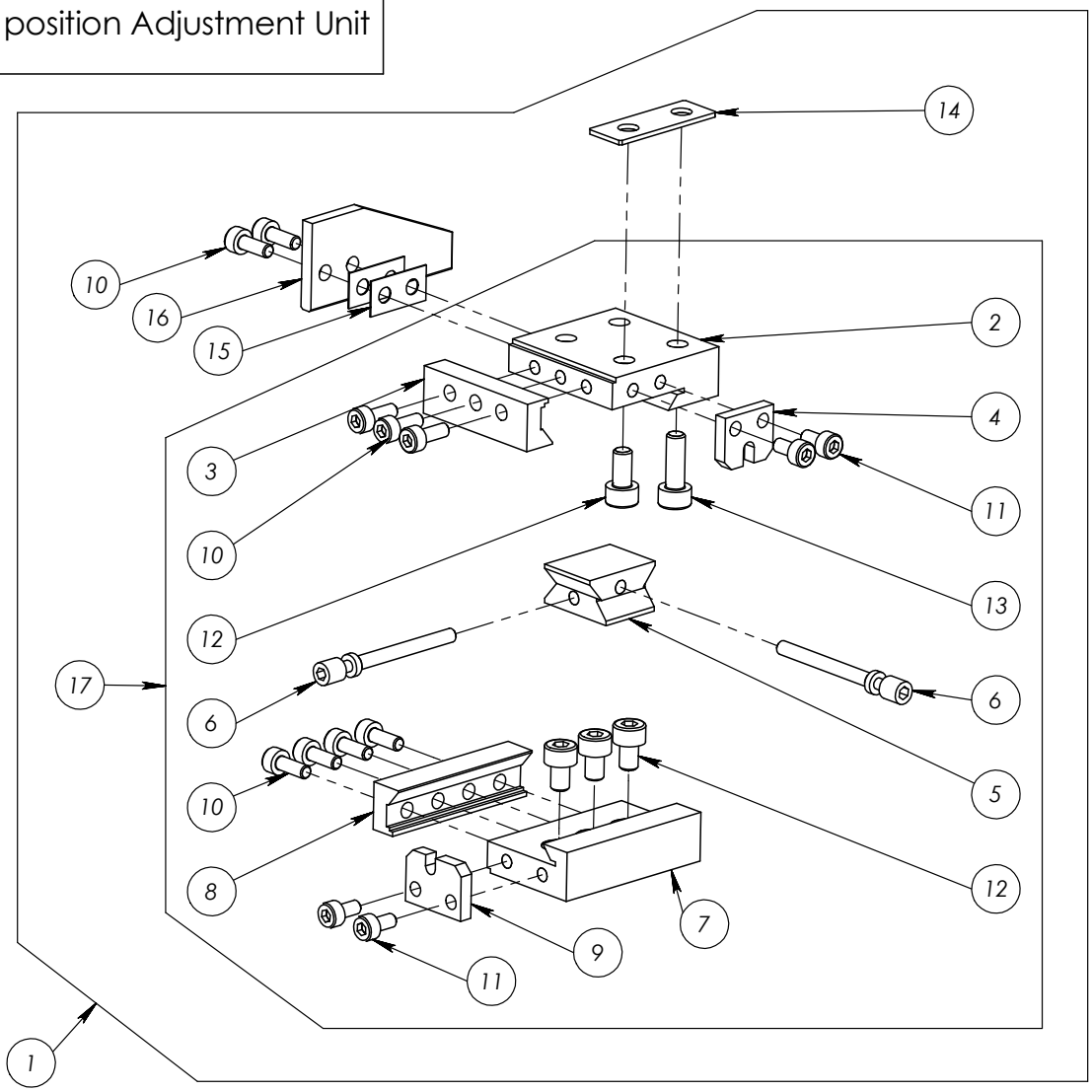

ITEM NO.	DESCRIPTION	PART NUMER	QTY.
1	Beads position Adjustment Unit (Assembly)	1404 0000	1
2	Body 32x31	1404 2228	1
3	Clamp L=32mm	1404 2230	1
4	Retainer 1	1404 2229	1
5	Jetnut	1404 2231	1
6	Adjusting Screw	1404 2232	2
7	Body 39x24.5	1404 2233	1
8	Clamp L=39mm	1404 2234	1
9	Retainer 2	1404 2235	1
10	Hexagon Socket Head Cap Screw M3x8 DIN 912	000 2008	9
11	Hexagon Socket Head Cap Screw M3x6 DIN 912	000 2018	4
12	Hexagon Socket Head Cap Screw M4x8 DIN 912	000 2012	4
13	Hexagon Socket Head Cap Screw M4x12 DIN 912	000 2005	1
14	Spacer	1404 1279	1
15	Rectangular Washer 0.3mm	1404 1280	2
16	Abutment Plate	1404 1278	1
17	Slide (Assembly)	1404 2227	1

Rev.	Sheet	Doc. No.:	Sign.	Date	Beads position Adjustment Unit	Sheet 7

Beads Feeding Unit

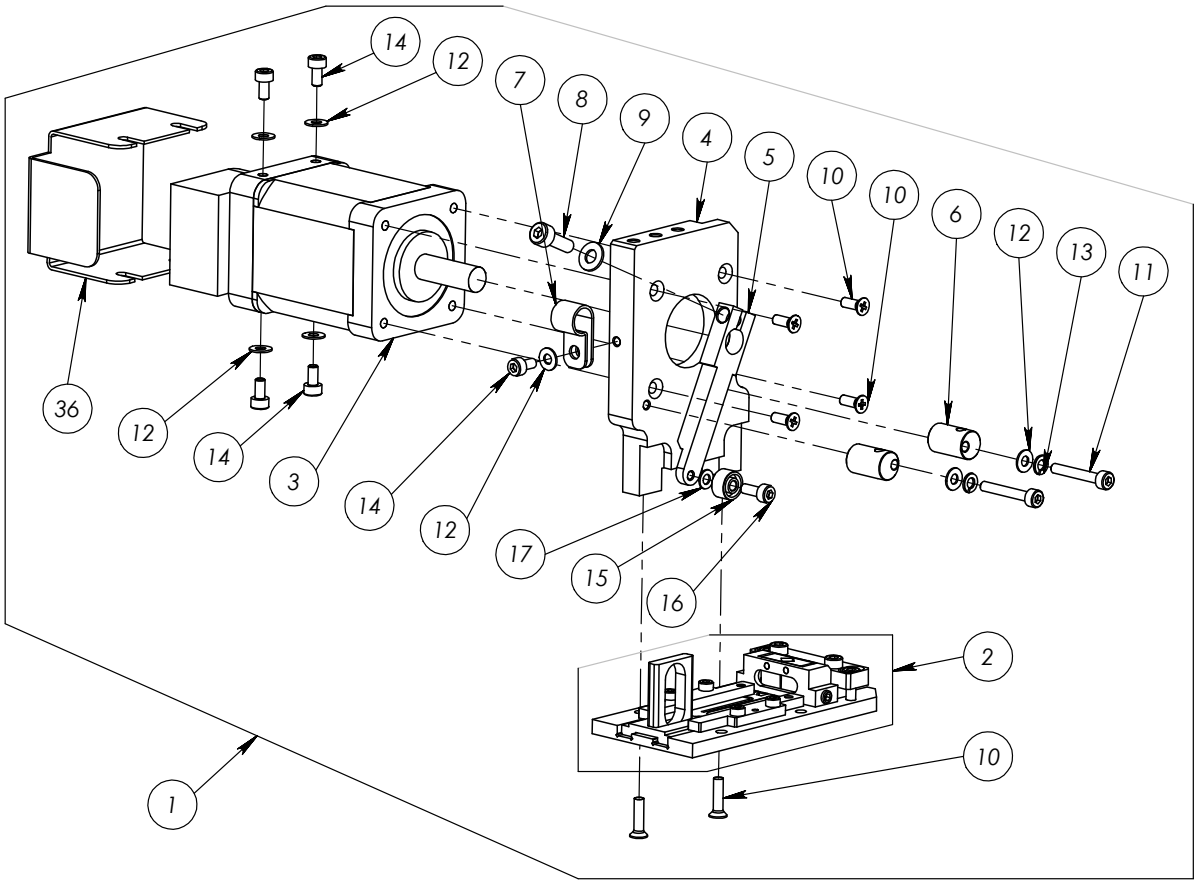

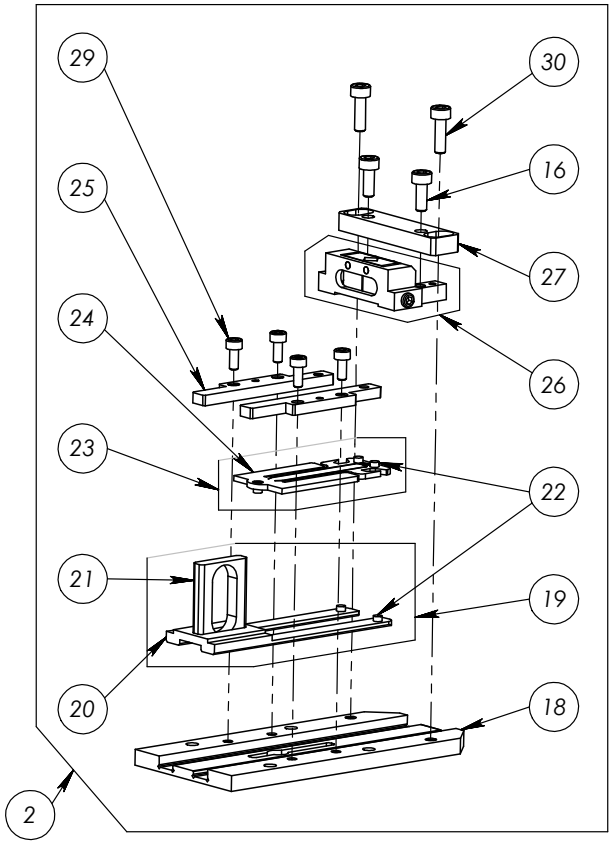

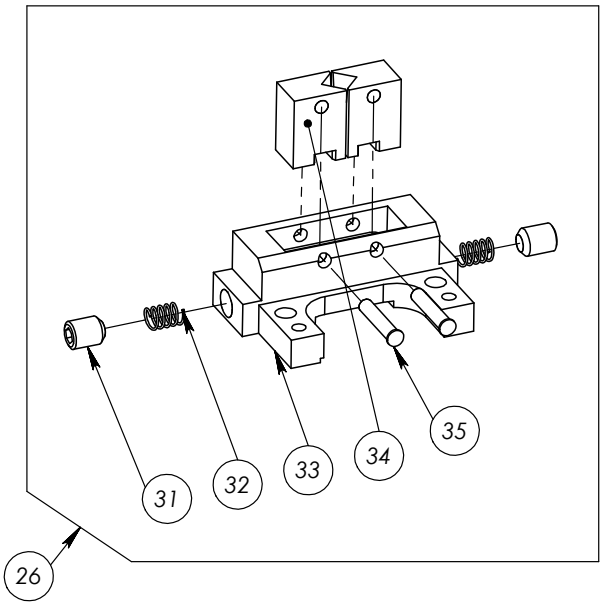

Rev.	Sheet	Doc. No.:	Sign.	Date	Beads Feeding Unit	Sheet 8

Beads Feeding Unit

ITEM NO.	DESCRIPTION	PART NUMBER	QTY.
1	Beads Feeding Unit (Assembly)	1405 0000	1
2	Feeding Guide (Assembly)	1405 1252	1
3	Step Motor 4260C1604-2507A-1500	1405 4009	1
4	Beads Feeder Body	1405 1255	1
5	Lever	1405 1253	1
6	Cam	1405 1254	2
7	R-type Cable Clip d=8mm (Nylon)	000 2216	1
8	Hexagon Socket Head Cap Screw M4x12 DIN 912	000 2005	1
9	Plain Washer Small 4.3 DIN 433	000 2007	1
10	Countersunk Flat Head Cross Recess Screw M3x10 ISO 7046-1	000 2022	6
11	Hexagon Socket Head Cap Screw M3x20 DIN 912	000 2237	2
12	Plain Washer Small 3.2 DIN 433	000 2009	6
13	Spring Lock Washer 3.2 DIN 6905	000 2091	2
14	Hexagon Socket Head Cap Screw M3x6 DIN 912	000 2018	5
15	Radial Ball Bearing 303 ISO 15 RBB	000 2238	1
16	Hexagon Socket Head Cap Screw M3x8 DIN 912	000 2008	3
17	Plain Washer Small 3.2 DIN 433	000 2009	1
18	Guide	1405 1256	1
19	Beads Feeder (Assembly)	1405 1257	1
20	Beads Feeder	1405 1258	1
21	Ear	1405 1259	1
22	Detent	1405 1260	5
23	Tong (Assembly)	1405 1261	1
24	Tong	1405 1262	1
25	Frame	1405 1263	2
26	Prismatic Feeder (Assembly)	1405 2239	1
27	Pressure Plate	1405 1265	1
28	Magnet 20x5x2	000 2240	1
29	Hexagon Socket Head Cap Screw M2.5x6 DIN 912	000 2241	4
30	Hexagon Socket Head Cap Screw M3x10 DIN 912	000 2020	2
31	Hexagon Socket Head Cap Screw M4x5 DIN 912	000 2015	2
32	Spring	1405 2243	2
33	Prismatic Feeder Body	1405 2242	1
34	Prism	1405 2244	2
35	Pin D2x10	000 2245	2
36	Zero Sensor Cover	1405 1277	1

Rev.	Sheet	Doc. No.:	Sign.	Date	Beads Feeding Unit	Sheet 9

MADE
IN
GERMANY

ZSK Stickmaschinen
Magdeburger Str. 38- 40
47800 Krefeld • Germany
Online: www.zsk.de
Email: zsk@zsk.de
Tel.: +49 2151 444 0

facebook.com/ZSK.Stickmaschinen

youtube.com/zskfilm

twitter.com/zsktechembroid

instagramm.com/zsk_stickmaschinen

ZSK - DIE STICKMASCHINE.